The Use of Hibernation Modes for Deep Space Missions as a Method to Lower Mission Operations Costs

E.Reynolds, P.Panneton, M.Reinhart, D.Mehoke, W.Dellinger, S.Williams, J.Perschy, R.Harvey, P.Carr
Applied Physics Laboratory, The Johns Hopkins University, (240) 228-5101, ed.reynolds@jhuapl.edu

Abstract

Hibernation modes have been used in the past in the commercial and military sector under the name of 'on-orbit storage' or 'onorbit spare'. Satellites that have used this technique include: METEOSAT-5 (Europe). SOOS (Navy), NOVA (Navy), GOES-10 (NOAA). These spares are used to quickly restore functionality of the system if there should be an on-orbit failure. Up until now, scientific satellites have not incorporated hibernation modes in their baseline mission timeline – though several missions used them to perform extended missions: GIOTTO and ISEE-3/ICE. During its competitive proposal phase, CONTOUR baselined a hibernation mode as a method to reduce mission operations costs and to reduce the burden on DSN resources. CONTOUR's hibernation mode reduces the spacecraft's required functionality to a minimum in a power stable, thermally stable, spin stabilized attitude. The European Space Agency (ESA) Rosetta mission is also implementing a hibernation mode in its baseline mission.

This paper is intended to educate the reader on the different facets of CONTOUR's hibernation mode and issues that were taken into account during design.

Introduction

CONTOUR's mission is to flyby several comet nuclei and to assess their similiarity and diversity. CONTOUR is a NASA Discovery program mission that was selected through a competitive process. Hibernation is one of four major modes of the CONTOUR spacecraft. Figure 1 is a simplified state diagram that shows the spacecraft modes along with their interactions and submodes.. CONTOUR uses hibernation as a technique to minimize mission operations costs and DSN burden, without introducing risk to the program.

The modes describe the behavior of the spacecraft in general and how the spacecraft responds to different anomalies. When actively preparing for a comet flyby, the spacecraft is 3-axis controlled. During most other times, including hibernation, the spacecraft is spin stabilized. What governs the control mode is the functionality of the powered components and the commands sent to those components. It is important to note that hibernation mode is accessible from only one other mode – the active spin mode. The transition between hibernation and active spin mode is achievable only by a ground command.

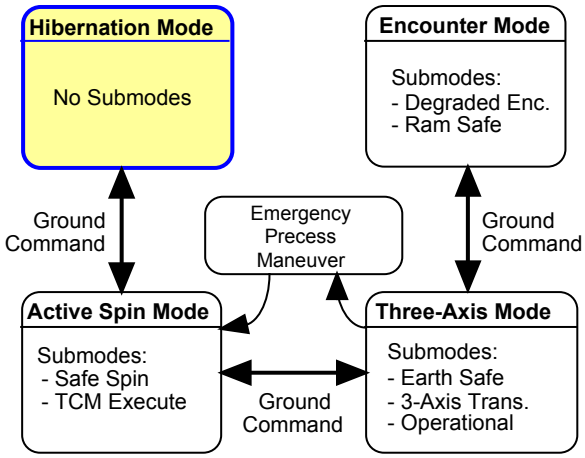

Figure 1 – CONTOUR Modes

Over its baseline mission, CONTOUR will hibernate four times. The general characteristics of each hibernation are identified in Table 1. Over all the hibernations, the longest unattended period is 300 days. During that

time, the Sun distance varies between 0.93 and 1.13 AU. In all cases, the Earth-spacecraft distance is less than 0.13 AU at the times of hibernation recovery. Also in all recovery cases, the spacecraft is steadily approaching Earth.

CONTOUR's approach to hibernation is heavily influenced by the hibernation techniques successfully pioneered by the Giotto extended mission (GEM). During its extended mission, Giotto successfully traveled for over 1400 days without any ground contact. The Giotto GEM was more challenging in the sense that Giotto was not designed for hibernation – CONTOUR is. Also, the communication distances associated with the Giotto trajectory are much greater than those required of CONTOUR.

The basic mode of hibernation is to spin stabilize the spacecraft at a selectable rate between 15 and 25 rpm. The spin-axis is normal to the plane of the spacecraft's orbit around the Sun. This keeps the Sun at the spacecraft's waist (90 degrees). The spacecraft will remain this way until ground controllers command the spacecraft to wake it up by sending the 'active spin mode' commands.

When hibernating, the spacecraft is operating at an extremely low level of activity. Instruments and most subsystems will be powered off. Only the command receivers, thermostatically controlled heaters, and critical core components will be powered. The receivers will be connected to the two low gain antennas (LGA). The command systems will run autonomy rules that monitor the onboard housekeeping telemetry to identify faults and remove them. It is assumed that there will be no ground contact with the spacecraft while in this hibernation state.

==========

Table 1 – General Hibernation Characteristics

#	Hibernation Dates	Duration (Days)	Sun Range (AU)	Recovery Distance (AU)	Crosses ecliptic plane?
1	Oct '02-Jul '03	250	0.93 – 1.13	0.13	Yes
2	Nov '03-Jul '04	220	0.97 – 1.07	0.13	Yes
3	Sep '04-Jan '05	120	0.98 – 1.01	0.12	No
4	Mar '05-Jan '06	300	0.94 – 1.07	0.13	Yes

==========

When evaluating the robustness of a hibernation mode, there are three-fundamental themes that must be addressed. They are:

1) **Configuration**. Is the spacecraft assured to be in a good power and a good thermal environment? Is there a good antenna pointing geometry to simplify hibernation entry and recovery?

2) **Fault Protection**. What fault protection methods are in place that prevent the spacecraft from dying while unattended? Is the onboard fault protection system robust enough to isolate faults to a degree equal or better than a spacecraft frequently attended to by ground controllers? (this assumes an ideal condition where controllers are not introduc-ing faults into the attended spacecraft).

3) **Trajectory/Navigation.** Is the mission design trajectory simple enough not to require adjustments during hibernation periods? Can the spacecraft's position and velocity be tracked well enough prior to hibernation, and its orbit extrapolated to an accuracy well enough that: 1) the spacecraft's position will be known well enough to be recovered by the DSN?, and 2) will the spacecraft's post hibernation position be known well enough that large amounts of fuel are not expended for course corrections?

This paper addresses these three themes. The first theme is addressed starting with an overview of the spacecraft design and its operation. The spacecraft's spin stability is described and shown that using passive techniques the spin axis is controlled to within a few degrees over the entire hibernation period. The spacecraft's power margin for the hibernation attitude over the hibernation trajectory is presented and shown to be very robust. The

thermal design is then presented and shows that during hibernation, most components are maintained at very moderate temperatures. Finally, this section describes the communications system, and the recommended approach to enter and exit hibernation.

The paper also describes the Fault Tree Analysis (FTA) and Failure Modes Effects Analysis (FMEA) performed to evaluate the design and to help improve overall reliability either by a change of design or some other means. FTA is a top-down approach to failure analysis while FMEA is a bottom's up approach. Along with the FTA and FMEA analysis, the autonomy system and rules that operate while in hibernation to help mitigate failures is presented.

The third theme (trajectory/navigation) is addressed, but not to the level of the other two themes. The basic conclusion of trajectory, is that given the spacecraft's range and range rate accuracy (the same as the successful NASA NEAR mission), and the existing tools of the navigation team (the same tools that were used on NEAR), the trajectory prediction and control are adequate to efficiently operate
CONTOUR

==========

Section One: Mission Trajectory & Spacecraft Overview

Contour Trajectory & Hibernation Period Selection

The baseline mission trajectory consists of five Earth-return loops. Each loop begins and ends with an Earth swingby. These are shown in Figure 2. The numbers identifying the loops correspond with the hibernation's identified in Figure 3. Loops (hibernation's) 1, 2, and 4 have trajectories that cross the ecliptic plane, while loop 3 does not; it essentially rises and falls above Earth's north pole. This can be better seen in the profile and sun perspective views in Figure 4.

The selection of dates to start the hibernation periods were based on several factors: encounter dates, post SRM burn TCMs and instrument calibrations. Beyond providing opportunities for those activities, time is allotted for sufficient tracking to verify the orbit trajectory and to correct trajectory errors that would propagate over the hibernation period.

The selection of dates to end each hibernation is a simpler process. Each one ends 35 days prior to the upcoming Earth swingby. This is deemed a suitable period of time to awaken the spacecraft, track it sufficiently to establish its orbit, and then make the required TCMs to correctly execute the Earth swingby.

Note several things in Figure 3. First of all, the Sun distance is almost a constant one AU. The most dynamic excursions in Sun distance occur during loop 1. With regard to Earth distance (RF communications) the worst-case distance is 0.55 AU. When entering hibernation, the worst-case distance is 0.35 AU. The green dots within the figure denote Earth distance at the hibernation recoveries – note all occur around 0.13 AU.

Spacecraft Avionics Overview

Figure 5 shows that CONTOUR spacecraft along with identifiers of key components. Figure 6 is a simplified block diagram of the spacecraft avionics. The portions shown in yellow are powered on during hibernation. Both Command and Data Handling (C&DH) processors are powered and operating. One acts as the bus controller to the MIL-STD-1553 bus that collects telemetry from the power system and deposits it into the housekeeping buffer of each C&DH processor. Both C&DH processors also perform the autonomy rule evaluations that detect faults and isolate them. The rules operate using the data in the housekeeping buffers.

Each receiver is connected to its own dedicated reference oscillator. Received relay commands can be executed immediately, through the uplink cards' 'critical command decoder' (CCD) without forwarding to the C&DH system. The use of the CCD allows for ground intervention and reseting of the system – if it should ever lockup.

The antennas, RF switch assembly and diplexors are shown highlighted. All of these components are passive designs and their configuration does not change during hibernation – switches do not change state. Details of these components and their interconnection are shown in Figure 7. The switch position shown is a plausible configuration for hibernation. Both command receivers are powered with each connected to a low gain antenna.

Earth-Swingby Maneuvers	
Date	Perigee (Earth radii)
8-15-2003	9.1
8-14-2004	6.2
2-10-2005	34.8
2-10-2006	4.7
2-10-2007	1.2

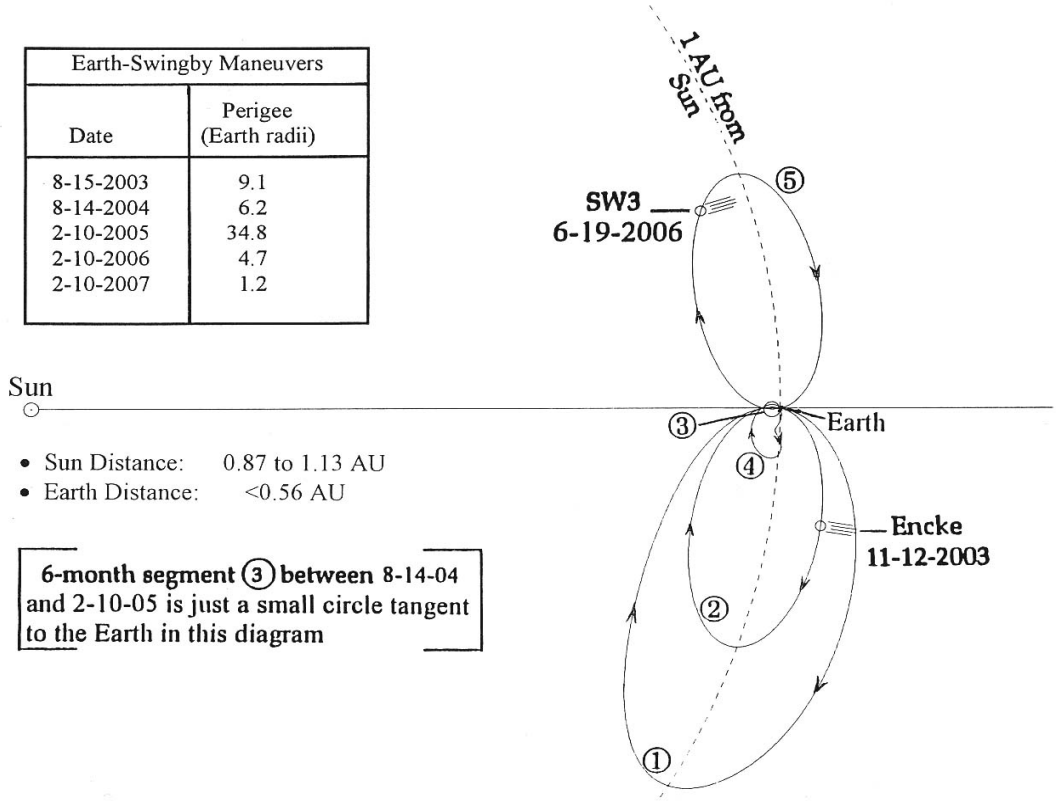

- Sun Distance: 0.87 to 1.13 AU
- Earth Distance: <0.56 AU

6-month segment ③ between 8-14-04 and 2-10-05 is just a small circle tangent to the Earth in this diagram

Figure 2. Mission trajectory relative to Earth-Sun line. Looking down on ecliptic plane.

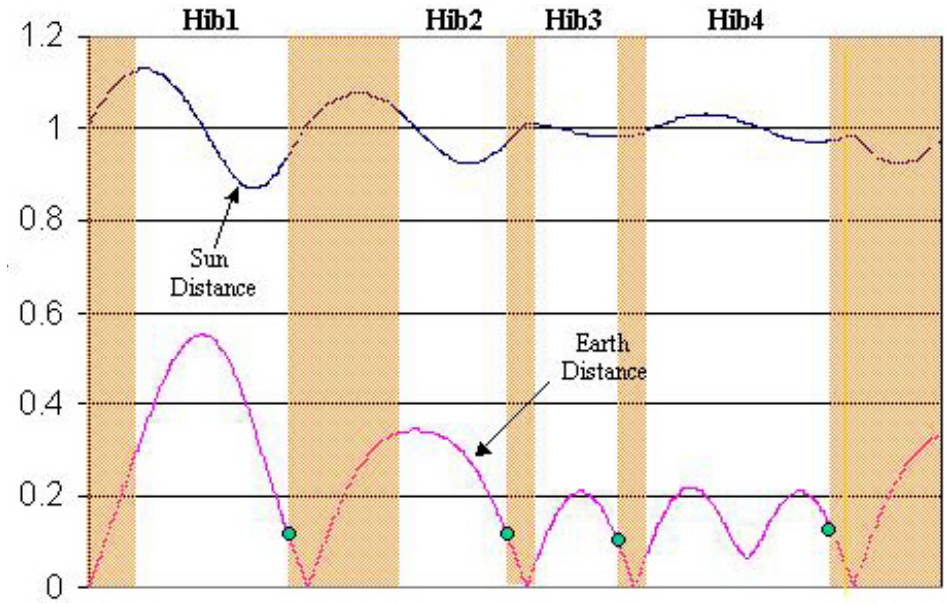

Figure 3. Spacecraft's Sun distance and Earth distance over mission duration. The white bands denote the four hibernation periods in the baseline mission.

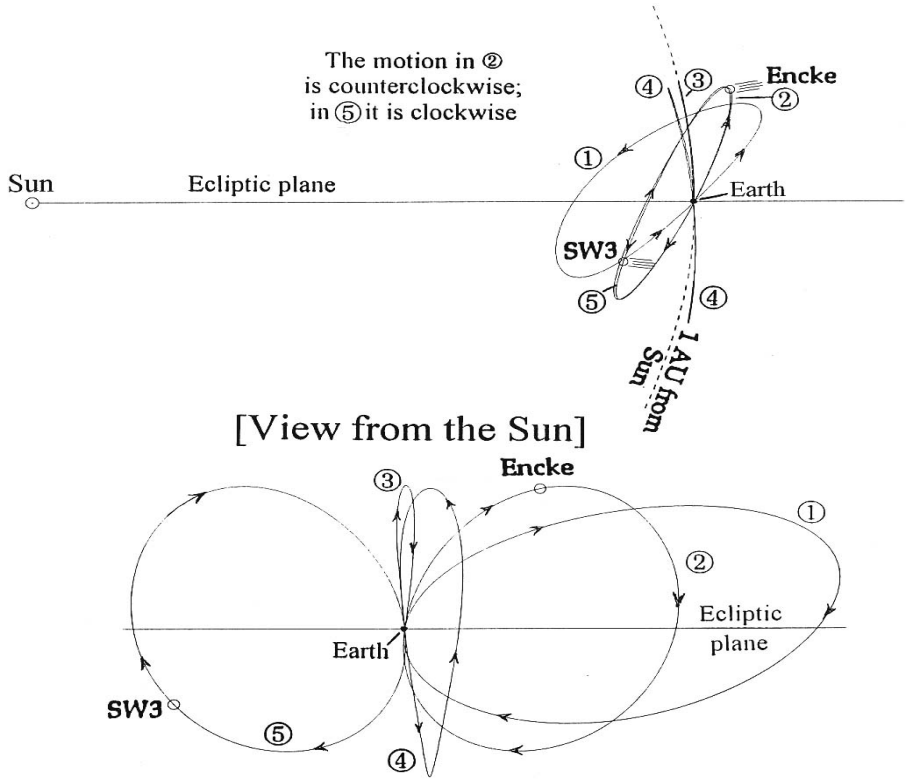

Figure 4. Mission Trajectory from profile and Sun fixed views.

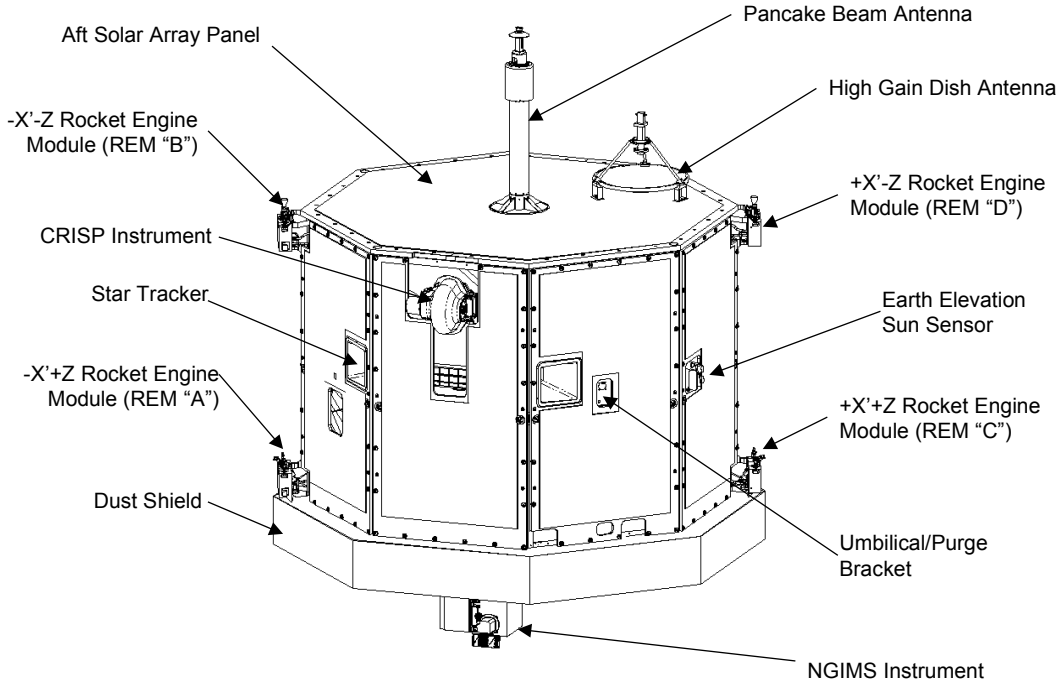

Figure 5. CONTOUR Spacecraft

A large portion of the power system is operating during hibernation. The power system resides in two boxes: the power system electronics (PSE) and the power switching unit (PSU). The PSE connects to the battery and solar array and provides clean unregulated power to the PSU for distribution. The PSE also charges the battery using voltage-temperature (VT) control techniques. Both bus regulators are powered during hibernation. Bus voltage is controlled through the use of digital (step load) and analog (vernier load control) shunts. One regulator has a slightly offset control value from the other such that it is held in reserve and does not actively compete with the other regulator. All shunts are fused.

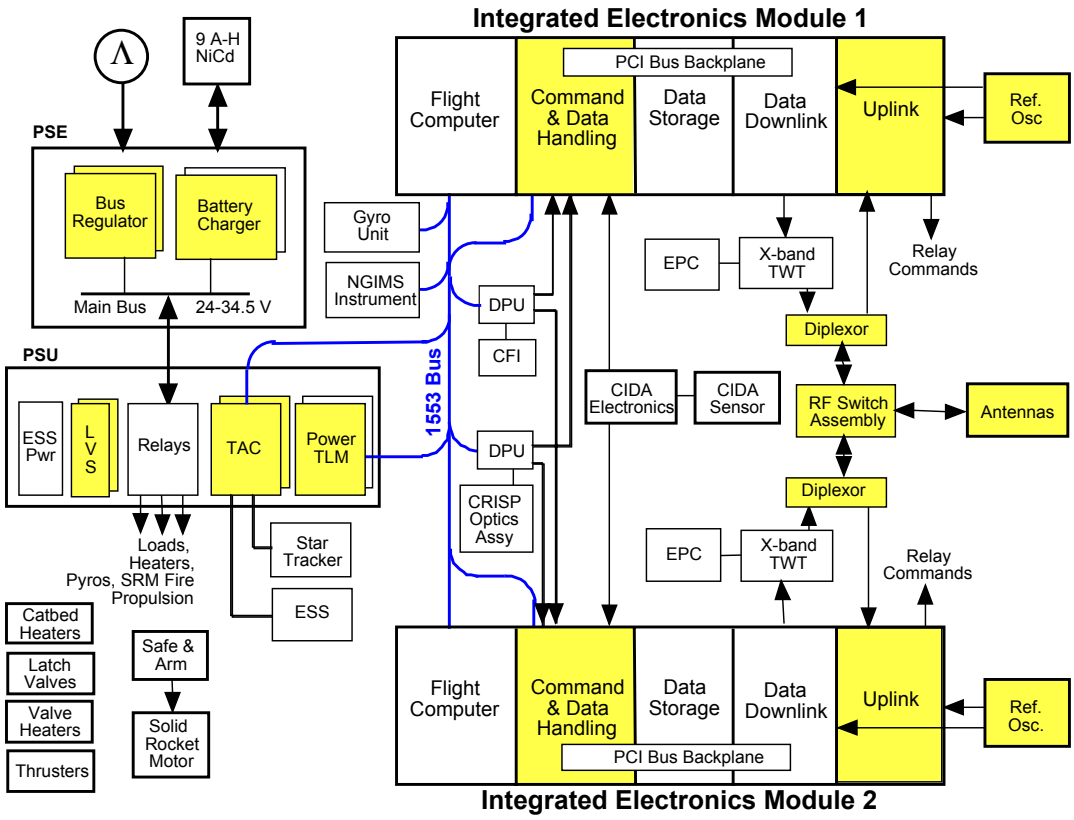

Figure 6. CONTOUR Top Level System Block Diagram.

The PSU has several different functions. Its primary function is to distribute power to loads through relays and field effect transistors (FET) and to report back telemetry about their state (current, relay on/off discrete). Other power system telemetry is also reported: system voltages, battery temperature, solar array and battery currents, etc. This information gets passed to the C&DH system for health evaluation. Also in the PSU is low voltage sense (LVS) circuitry that detects if the bus voltage is dangerously low. Both sets of LVS circuitry are powered during hibernation. The LVS circuits trigger a discrete to the CCD if a low voltage threshold is sensed. The CCD will use additional discretes that come from circuits that reside on the thruster attitude card (TAC) to determine if the low voltage was caused by regulator failure (more about this later in the Fault Detection and Isolation Section).

Not shown in the block diagram is the identification of heater circuits that are powered during hibernation. Most of the heater circuits have series redundant thermostats – such that a 'failed closed' thermostat will not overheat the component. There are some non-redundant thermostats in heater circuits that operate during hibernation. For these, the design was analyzed to prove that a failed-on thermostat would not cause harm to the component.

The propulsion system is not used in the hibernation mode. The system is 'locked down' to insure that propellant is not lost while the spacecraft is left unattended: the four latch valves are closed and the thruster power is disabled.

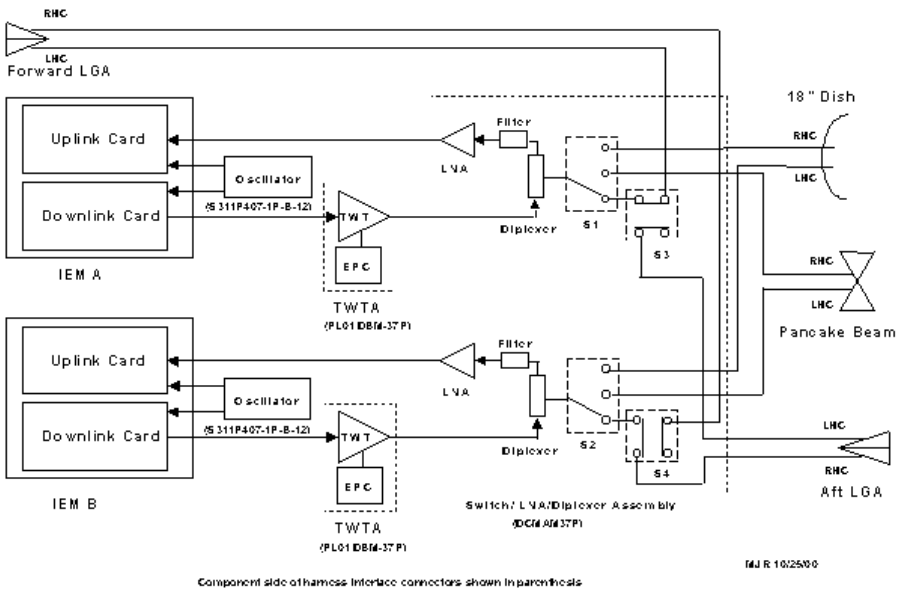

Figure 7. Details of the communication system.

==========

Section Two: Spacecraft Subsystem Performance

Given the mission design, hibernation period selection, and the general spacecraft architecture, a spacecraft spin axis orientation must be selected and then the overall performance of the spacecraft at that orientation over the hibernation trajectories must be evaluated. This section picks the orientation where the spin axis is oriented perpendicular to the orbit plane, and then looks at factors such as spin axis movement, power margin, thermal environment, and communications issues.

Passive Spin Stability and Stable Attitude

The crux of CONTOUR's hibernation strategy is to use an attitude control technique (spin stabilization) that requires no active intervention. Stabilization based on pure physics—once properly setup, attitude sensors and control actuators can be powered down or inhibited. For CONTOUR this means powering off the entire Guidance & Control Subsystem, including the thrusters.

The spin rate is selectable between 10 rpm and 25 rpm. The lower end (10 rpm) is limited by the requirement for the Earth Sun Sensor to operate while entering and exiting hibernation. The high end (25 rpm) is limited by constraints of the RF system communicating through the forward low gain antenna (Doppler shifted). In flight, the selected spin rate will be between 15 and 25 rpm. The criterion for spin axis drift is governed by the affect the drift has on the power and thermal subsystems. For each of those subsystems, the requirement was to operate nominally for changes in spin axis of +/- 15 degrees. The requirement placed on the spacecraft attitude spin axis was to drift no more than +/-10 degrees. The 5 degrees difference is held as margin. With regard to RF communications, the antenna patterns are quite wide and the omni-directional strategy being used is compatible with the fifteen degree requirement placed on the other subsystems.

Spin stability (stiffness) is proportional to the spin rate, but to spin up to the faster rates requires more fuel than the slower rates. For the longer hibernation's (1, 2, 4), the 25 rpm spin rate will be used. For hibernation number 3, a spin rate of 15 rpm is recommended.

The spacecraft design is spin balanced with less than 0.25 degrees difference between the Z-axis and its principal axis (at the moment of launch). As the fuel gets expended, and the instruments release their covers, the principle axis will shift. The largest potential for principal axis shift is by fuel imbalance in the two hydrazine tanks. Calibrated orifices that equally constrain fuel flow from the two fuel tanks limit the amount of imbalance to several hundred grams over the mission's entire fuel consumption. Using this technique, the total principal axis shift will be less than two degrees. Under nominal conditions, the balance control provided by the orifices is more than sufficient.
For long-term stability, the ratio of moments-of-inertia (MOI) of CONTOUR's principal axis to the other axes

must be greater than 1.05. The current models (and mass properties analysis) show that at the times of hibernation, the MOI ratio will range between 1.12 and 1.15 depending on fuel loading.

A reasonably good simulation of the spacecraft was performed for hibernation number 4 (300 days). The model included trajectory inputs from the latest JPL generated SPICE file for the mission. It placed the spacecraft's Z-axis normal to the trajectories orbit plane. The model included the current CONTOUR moments of inertia and also included the effects of center-of-mass and center-of-solar-pressure offsets. For the simulation, the spacecraft was spinning at 25 rpm. The results are shown in Figure 9. For the entire 300 days, the axis offset grows from 0 degrees to 1.4 degrees and then begins to decrease. Any offset between the Z-axis and the principal axis will manifest itself as a wobble with a period that coincides with the rotation rate. This wobble would appear as modulation on the curve shown below.
What can be concluded from this analysis is that after three hundred days at 25 rpm, the maximum worst case drift in the spin axis attitude will be less than 3.4 degrees (drift and principal axis offset) and will most likely be more modest. Again, this is by passive means and without the use of any part of the guidance and control subsystem during the actual hibernation period. Table 3 summarizes the spin axis drift requirements and the expected performance.

Other simulations have been performed in which the starting spin axis attitude was <u>not</u> normal to the orbit plane, but was normal to the ecliptic plane. The results in that case showed the drift reached a maximum of 7 degrees (versus 1.4 degrees). Though either case would have been acceptable to the spacecraft, the desire is clearly to orient the spacecraft normal to <u>its</u> orbit plane. A side benefit from this approach is that it keeps the Sun on the spacecraft's waist (90 degrees relative to the mast) making the power design and thermal performance more predictable. The other case would periodically place a portion of the solar incidence on the spacecraft top (aft solar panel) and bottom (dust shield). This would make the power generation and thermal environment much more dynamic.

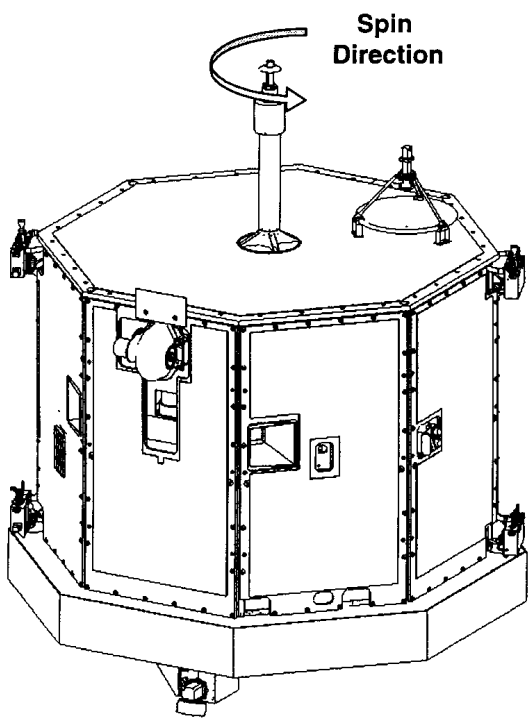

Figure 8 --CONTOUR Hibernation State

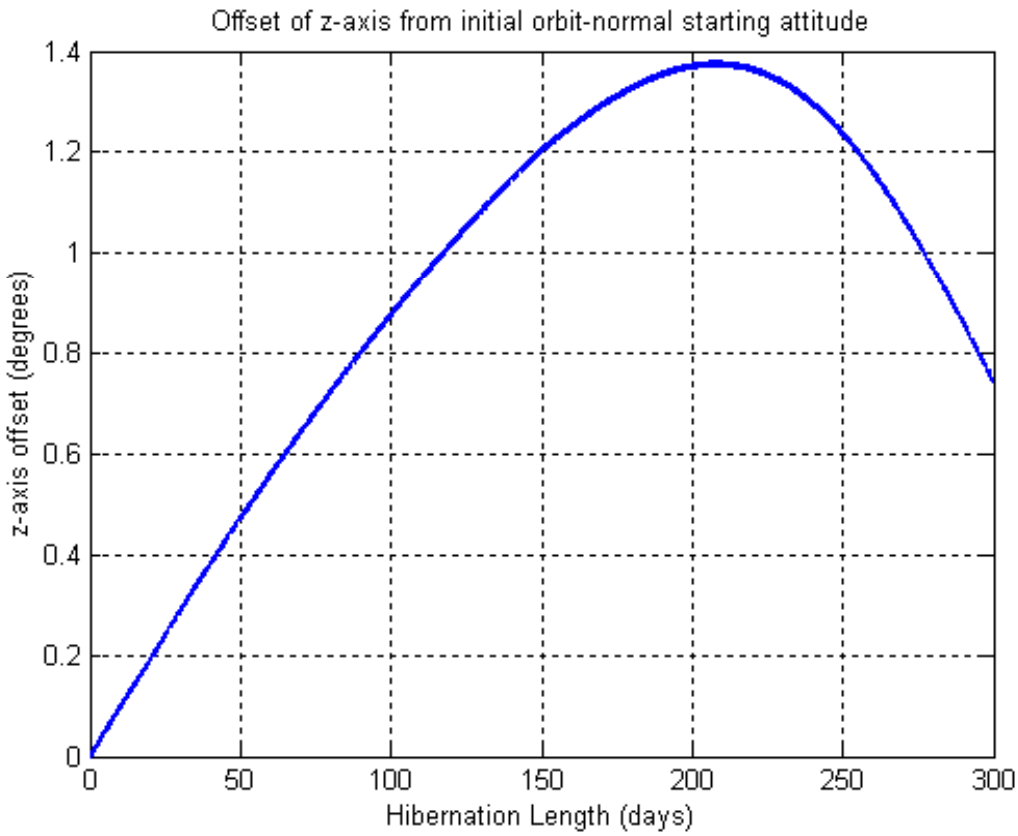

Figure 9. Spin-axis drift during 300-day hibernation.

Table 3. Spin Axis Drift Summary

Proper Subsystem Operation	+/- 15 deg
Max. Spin Axis Drift Requirement	+/- 10 deg
Max. Predicted Solar Pressure Drift	1.4 deg.
Max. Mass Properties Imbalance	2 deg.
Maximum Spin Axis Drift	3.4 deg.

Robust Power Generation

With the hibernation attitude described above, an analysis was performed of the solar array power generated over the mission hibernations. The power generated was compared to the worst-case hibernation loads (all active heaters on simultaneously) and the result is displayed as power margin versus mission timeline in Figure 10. The graphic shows that the minimum margin during hibernation is 19 percent, occurring at the beginning of the mission. For most of the hibernations, the margin is greater than 40 percent. This solar array analysis was performed using end-of-life (EOL) performance predictions of the solar array. The end-of-life prediction is about 70 percent of the beginning-of-life (BOL) performance. The result of this is that the power margins are actually much greater than depicted in the graphic, especially at the beginning of the mission.

During all hibernations, the battery will always be in a charge state, and the battery charge controller will nominally be set to 'trickle'. The health of power system circuitry is monitored and altered if necessary using a rule based system. Failures of circuits within the power system are detected by monitoring the power system telemetry and those failed circuits are electrically removed from the system.

Benign Thermal Environment

The overall thermal design of the spacecraft is dominated by solar distance and spacecraft attitude – and not by the internal loads. With hibernation, the attitude is fixed, so only solar distance drives spacecraft temperature. Using the hibernation attitude described earlier, an analysis was performed of the spacecraft temperature versus solar distance. The different components are identified. The results are displayed in Figure 11 – with the hibernation range clearly identified. The IEM A temperatures assume a steady state condition in which the IEM is fully powered (such as when it is sending relay commands).In reality, the IEM A temperatures will be almost identical to the IEM B temperatures.

Over all the hibernations, the spacecraft temperature is bounded between –20 degrees Celsius and +40 degrees Celsius. These temperatures are within the design and test limits of the spacecraft and its components. For most components, their temperatures will vary between 0 degrees Celsius and 30 degrees Celsius over the hibernation solar distance range. The spacecraft's spin rate of 15 to 25 rpm help keep the temperatures uniform and any temperature gradients to a minimum.

Nearly Omni-Directional Communications Links

As shown in Figure 3, the baseline mission's worst case Earth distance is 0.55 AU. During periods of entering a hibernation the worst case Earth distance is 0.35 AU. During all periods of exiting hibernation, the spacecraft is traveling directly towards Earth and the worst case Earth distance is 0.13 AU. This situation differs greatly from other deep space missions in that CONTOUR never really travels too far from Earth over its mission. Because of this, CONTOUR uses a nearly omni-directional strategy.

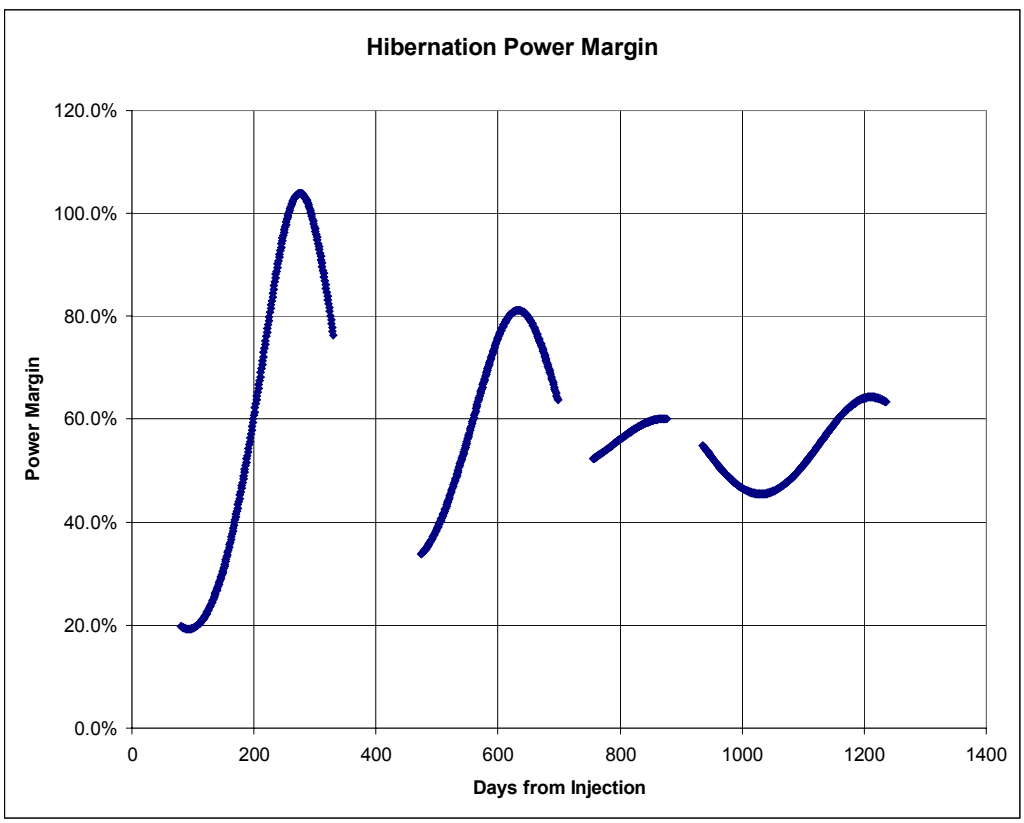

Figure 10. Hibernation power margin versus mission days

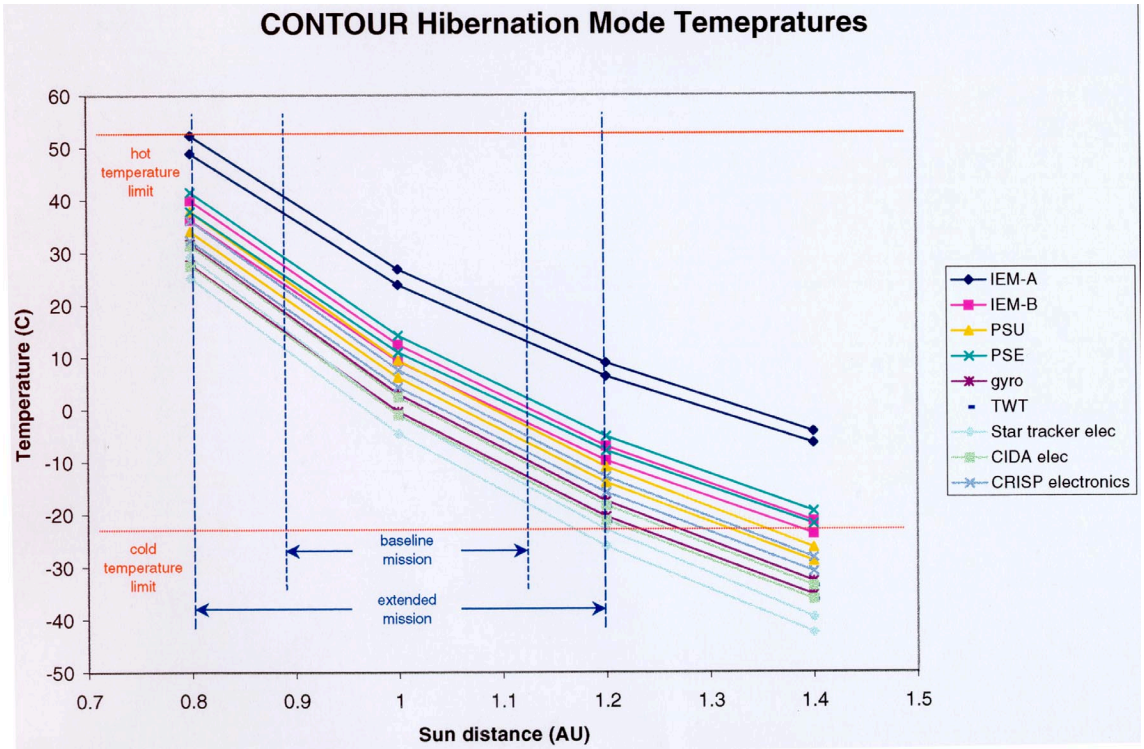

Figure 11. Spacecraft temperature versus solar distance. Hibernation range identified.

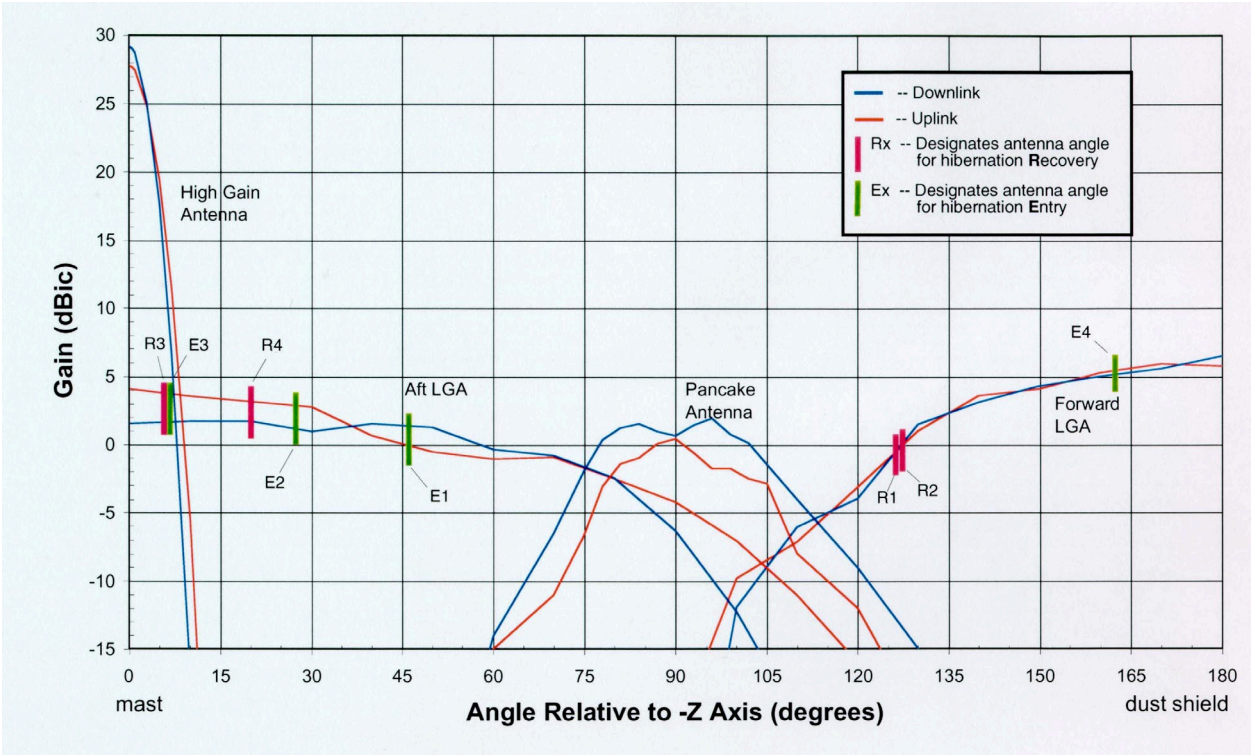

Figure 12. Uplink and downlink gains. Hibernation embarkation and recovery angles are identified.

CONTOUR carries four antennas: a high gain antenna (HGA), a forward low gain antenna (LGA), an aft low gain antenna, and a pancake beam antenna. Their gain patterns about the Z-axis are shown in Figure 12. The HGA is not used at all for hibernations. The pancake beam has limited utility to support the transitions between 'active spin mode' and 'hibernation mode'. It is the two LGA antennas that are primarily used for entering and exiting a hibernation mode.

The selection of which antenna is required is governed by the mission trajectory and the fact that the attitude is normal to the trajectory orbit plane. Moreover, if the trajectory crosses the ecliptic plane in the middle of hibernation (1, 2, 4) then the spacecraft enters hibernation on one LGA and is recovered on the other LGA. For hibernation number 3 for which there is no plane crossing, the same antenna is used for hibernation embarkation and recovery. The mast (-Z axis, aft end of the spacecraft) is on the left of the figure and the dust shield (+Z axis, forward end) is on the right side of the figure. The hibernation embarkations are identified with the letter 'E' followed by the corresponding period number (1, 2, 3, or 4). The hibernation recoveries are identified with the letter 'R' and the appropriate number.

For hibernations 1, 2, and 4, the program had the freedom to select which antenna to embark on and which antenna to recovery on. For hibernations 1 and 2 the choice was to embark on the aft (non-Doppler shifted) LGA and to recover on the forward (Doppler shifted) LGA. This is a result of the relatively large Earth distance (~ 0.35 AU) for embarkation for these two hibernations. For hibernation 3, the choice was easy – both the embarkation and recovery will occur on the aft (non-Doppler shifted) LGA. For hibernation 4, the forward LGA was selected for embarkation (0.09 AU) and the aft antenna was selected for recovery (0.13 AU). This strategy was followed because of the relatively close embarkation distance assured that the Doppler shift antenna could be used for the preparations required for hibernation entry.

If either of the two LGAs fail, then the spacecraft hibernation would be interrupted at the plane crossing, using the pancake beam antenna, and the spacecraft spin axis would be flipped 180 degrees. At which point, the spacecraft would be placed back into hibernation. The likelihood that the forward LGA would fail is much greater than that of the aft LGA. The forward LGA is exposed to plume heating of the SRM burn and is also exposed to the comet dust impacts during each comet encounter.

Navigation Issues

The CONTOUR spacecraft range and range rate capability is 200 meters (3-sigma, corrected) and 1.0 mm/s for 60s integration (3-sigma, corrected) respectively. These performance numbers have been verified by testing at DTF-21 and with recent testing with the NEAR spacecraft. The NEAR one way range test showed a data precision better than 10 meters). The Navigation/Mission Design team will use these numbers and the same techniques used on NEAR for orbit determination and predicting the resulting orbit propagation.

Using existing techniques, the Navigation team should be able to predict the position of the spacecraft to within 10,000 kilometers (one-sigma) at the time of recovery. This is a conservative estimate; at CDR, the stated position error was less than 4,000 km (one-sigma). At the 0.13 AU (19,400,000 km) recovery distance, this equates to a +/- .03 degree angle uncertainty in DSN antenna beam width. The beam width of the 34-meter antenna is 0.065 degrees and the beam-width of the 70-meter antenna is 0.03 degrees. Therefore the spacecraft should be within the pointed beamwidth of either selected antenna.

==========

Section Three: Fault Protection & Isolation Methods

Fault Protection Hardware

Hardware Low Voltage Detection. The PSU contains low voltage sense (LVS) circuitry that detect if the bus voltage is dangerously low. Both sets of LVS circuitry are powered during hibernation. The LVS circuits trigger a discrete to the CCD if a low voltage threshold is sensed. The CCD will use additional discretes that come from circuits that reside on the thruster attitude card (TAC) to determine if the low voltage was caused by regulator failure. Regardless of the source of the low voltage, virtually all the loads are shed by the CCD and the C&DH processors reset.

Bus Controller Failure Discretes. In general, the C&DH system uses other discretes to insure that the bus

controller is working correctly. The discretes come from the other C&DH processor, the two flight computers, and the TAC card. The discretes are input into the IEM through the command telemetry (CT) card. If the remote users detect that the 1553 bus is not working properly then they each raise their discrete line. This can be used to proactively change over to the remote terminal by letting the bus controller processor 'relinquish' control to the remote terminal. This is described later.

Heater fault tolerance. Heater circuits that are powered during hibernation are two fault tolerant: two thermostats are in series in each heater line. The autonomy system monitors the telemetry of the powered components with a rule-based system to intervene on anomalies.

Receiver lockup prevention. The digital circuit in each uplink receiver reset (via watchdog) every 40 hours. If there is a lock-up for some reason, the reset will clear it.

Load Fuses. Fuses will ultimately clear hard shorts. All loads, switched and unswitched, are fuse protected. The fusing arrangement is with two parallel fuse legs with a steering resistor added to one of the legs – as a means protect against a faulty fuse.

Internal Power System Fuses. Many of the power system internal components such as digital shunt circuits, analog shunt circuits, and bus capacitors are individually fused.

Hibernation Autonomy Software

CONTOUR's command and data handling processors each contain autonomy systems. Once per second it evaluates rules using data from a collection buffer; the buffer itself is updated at a one hertz rate. The function of the autonomy system during hibernation is to identify faults and then to isolate them such that the spacecraft is alive and healthy while unattended. Many of the functions that hibernation autonomy performs were identified through the Fault Tree Analysis and FMEA process.

Figure 13 shows the autonomy system control of the power system during hibernation—and its response to different anomalies. If there are no anomalies, then the entire hibernation period will be spent in the circle titled 'Fat & Happy'.

The autonomy system looks at telemetry data to see what relays are powered on. If it detects a relay that is on but does not need to be on to support hibernation – like the star tracker – then it will power that relay off. Likewise, if it detects that a critical function needed for hibernation – like a heater – is not powered, then it will power that function on.

The autonomy system looks at the individual component power of the components that are on. If the power (component current multiplied by bus voltage) exceeds a certain threshold for five seconds in a row, then that component is powered off and a secondary load is powered on. The threshold is set to be 50 percent above the peak steady state current. The five second value was selected to be long enough not to trigger because of inrush current during component power up.

The autonomy system will look for several signs of systemic power system failures. It will look for any battery discharges. During hibernation the power margins are so great that the battery should never discharge. Once detected, the system looks at key telemetry points regarding the regulator and battery charger—including digital and analog shunt current. In addition to implementing this fault isolation scheme, the system will temporarily shed heater loads to avoid solar array lockup (a direct energy transfer system phenomenon) and will change the battery charger mode from 'trickle' to 'high' for a period of about one hour. The data used to trigger this power safing strategy is heavily filtered to prevent false trips. The data used for the safing recovery is also filtered but not as much for reasons of timeliness.

The autonomy system will look for Battery charger failure. It will perform an arithmetic check where battery temperature is multiplied by a predetermined scale factor. If the resulting value exceeds a predetermined threshold, then the rule deems that the charger circuit is bad and switches over to the other battery charger.

The autonomy system will execute a 'Soft LVS' if it detects that the bus voltage has dropped to a dangerous level. The soft LVS looks very similar to the response of the hard LVS but is meant to add flexibility to the safing design and catch the fault earlier than the Hard LVS would.

If the bus voltage continues to drop after an LVS trip, there is one final action that occurs at 22 volts called 'Last Ditch Effort'. This rule will essentially change the selected bus regulator one last time.

Because the autonomy system relies on data provided by the PSU telemetry system during hibernation, the 1553 bus must operate. If there is a failure of the bus controller (or the processor acting as bus controller),

then the power system (PSE) is operating without a monitor. This is perfectly acceptable as long as the PSE does itself does not experience a failure. There are two independent strategies to correct the problem of a failed bus controller during hibernation.

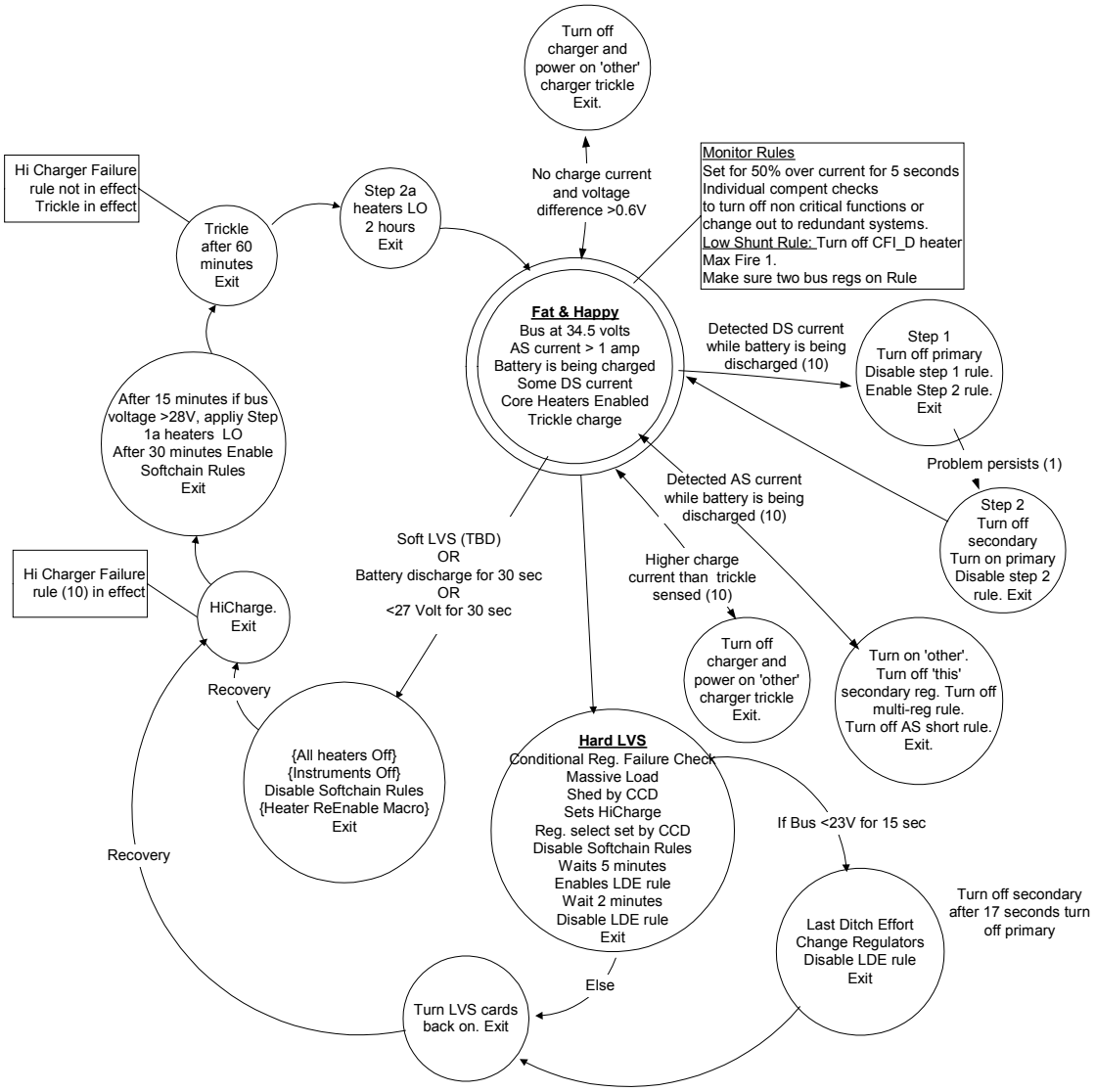

Figure 13. Autonomy System Control of Power System during Hibernation

In addition to monitoring the powered state of the spacecraft and insuring the health of the power system, the autonomy rules also perform other tasks. The autonomy systems work check that the selected antennas are diverse and that the high gain antenna is not used. The autonomy system will make sure that the propulsion system is inhibited to prevent thruster firings: by disabling relays required to generate thruster pulses, by keeping latch valves closed, and by keeping thruster logic circuitry in the OFF mode.

Fault Tree Analysis

Fault tree analysis was first started in Phase B and still remains an active systems engineering tool. It is a top down approach to failure analysis in which mission ending catastrophes are formulated and then possible failure scenarios that lead up to the ultimate catastrophes are flushed out. CONTOUR has identified eighteen top-level catastrophes –of which

three relate to hibernation: "unable to wake up from hibernation", "premature loss of propellant", and "inadequate power for survival". If the autonomy rules work correctly and the propulsion system is truly locked down by multiple methods, then the only possible cause of premature loss of propellant is through a leak in either the propellant system between the tanks and the latch valves or a leak in the pressurant system. Leak related failures can not be prevented by frequent ground contact.

The failures that would lead to inadequate power for survival would be due to multiple internal failures of power system circuitry or by catastrophic degradation of the solar array due to solar flares. The evaluation of the internal design of the power system circuitry is best left to a bottoms-up FMEA to identify any flaws in the fault isolation topography. Large degradations of the solar array is unlikely given the extremely large power margins during hibernation – and would have a more pronounced effect in other phases of the mission where power margins are smaller.

The third catastrophe, 'failure to wake up from hibernation', has three possible failure scenarios: unable to receive commands (multiple hard uplink failures or spacecraft in wrong configuration to receive commands), spacecraft in the wrong position, or 1553 bus not in place to correct regulator failures. The scenario of the 'spacecraft in the wrong position' can be mitigated by an independent verification of the orbit errors and the force model. With regard to the bus issue, the MIL-STD-1553 bus is fully redundant and strategies are in place to insure that a functioning bus controller is always active.

Failure Modes And Effects Analysis

A FMEA analysis was recently completed for CONTOUR by Strategic Technologies Inc.(STi). FMEA is a bottoms up analysis in which piece part failures in the spacecraft circuit designs are propagated up to see if they cause mission-ending catastrophes. Many of the failures that are identified are mitigated by the use of redundant circuitry. As long as the failed component can be detected and removed gracefully and the backup circuit inserted into the system, then the mission continues. If the backup circuit should fail then, depending on the function, the mission may be over. This is reality for all space missions – regardless of whether the spacecraft is unattended or frequently contacted.

For hibernation, the FMEA analysis is simplified by the limited amount of avionics powered on during the cruise. The unpowered circuitry does not endure mean time between failure (MTBF) effects. The FMEA identified eighteen 'Level 1' failures (and identified recommendations of mitigation) across all mission modes. Of the eighteen, there were eight that were related in some way to hibernation. Most of the eight were power related and universal to all spacecraft modes. When possible, the onboard spacecraft autonomy systems are used to mitigate the propagation of failures.

==========

Section Four: Hibernation Related Issues

Motivations for hibernation mode

CONTOUR implemented a Hibernate mode to reduce mission operations costs, lower the resource requirements placed on the Deep Space Network during cruise, and to reduce the amount of powered on time for large portions of the spacecraft.

The costs of an active cruise are divided between the mission operations team and the DSN, with the ops team costs dominating. To pursue a cruise staffing similar to NEAR would average eight people (not including engineering support and sequencing development.)

The following algorithm governs the DSN costs:

$$\$ [\ 710\ ] \times [\ Sf\ ] \times [Cf\ ] / \text{hour}$$

where:

Sf = Station Factor = 1.0 for 34-meter dish
4.0 for 70-meter dish

$$Cf = \text{Contact Factor} = \left[0.9 + \frac{\text{weekly contacts}}{10}\right]$$

Over CONTOUR's mission lifetime of roughly 6 years, DSN assets are required just 6% of the time. In comparison, NEAR had no hibernation mode and remained active and three axis stabilized throughout its entire mission. NEAR was not designed to cruise for long periods while unattended. Because of this, NEAR was contacted three times per week (8-hour pass per contact) throughout its three-year cruise. NEAR has been fully staffed by a mission operations team since launch. The NEAR spacecraft averaged at three 8-hour contacts per week during cruise -- about 1.1$M per year.

A hidden cost is the wear placed on an active spacecraft. With an active cruise, more of the spacecraft would be powered (telemetry formatters, power amplifiers, G&C components, thrusters and thruster control circuitry, etc) and Mean Time Between Failures (MTBF) issues begin to place higher redundancy requirements on the spacecraft design for the durations involved.

Historical Precedents

GIOTTO. The GIOTTO Extended Mission (GEM) is the best analogy to the CONTOUR baseline hibernation. In its extended mission, GIOTTO hibernated twice—the first hibernation began in March 1986 and lasted for 1,402 days. The second hibernation began in July 1990 and lasted for 670 days.

GIOTTO and CONTOUR share similar traits. They are very close in wet mass (CONTOUR is 963 kg at launch versus Giotto's 960 kg). They both have body mounted solar cells and a dust shield. They both use an onboard solid rocket motor (similarly mounted) to achieve their final trajectories. GIOTTO was designed to have an inertia ratio in excess of 1.08 and at the beginning of the mission it was close to 1.1. Thses numbers are almost identical to CONTOUR.

There are some differences however. GIOTTO was designed to be actively controlled and was never intended for hibernation. Its RF system was S-band. The Earth distance involved was quite large and the LGAs lacked the gain required for omni-directional communication. Instead, its high gain antenna had to be pointed within one degree of Earth's direction to successfully communicate. The spacecraft did not have <u>any</u> knowledge of the Earth direction at the time of recovery. The knowledge on the ground of the spacecraft spin axis was clouded by the effects of the solar pressure pushing the spin axis in a spiral pattern of unknown amplitude. This was complicated by a mass imbalance from a large dust hit that caused the spacecraft to wobble. The RF distance to Earth at the time of reactivation was greater than 0.6 AU.

Entering and Exiting Hibernation

Hibernation preparation takes fifteen to twenty days. See Figure 15. During this period the spacecraft is in ground contact roughly every other day for 8-hours per day. The first half of hibernation preparations are essentially monitoring, tracking, and model verification. For this, the spacecraft can be oriented into an attitude more favorable for higher bit rates.

The second half of the preparation period is dedicated to placing the spacecraft in its hibernation configuration

To overcome these challenges, the GIOTTO team developed a fairly complicated strategy to command the spacecraft 'in the blind' that consisted of two different types of thruster maneuvers that would result finally with the high gain antenna pointed toward Earth.

With both recoveries, the GIOTTO team successfully resurrected the spacecraft. GIOTTO is presently in a hibernation state, with no intent of ever activating it again.

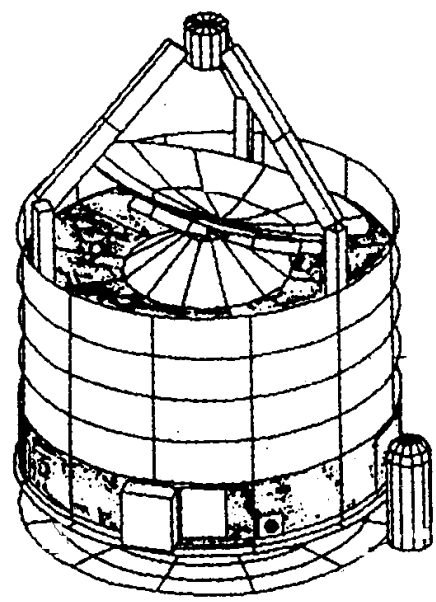

Figure 14 —GIOTTO Spacecraft

ROSETTA. This mission launches in 2003 on a ten-year mission to land on a comet. To reduce mission operations costs—and also because of trajectory constraints—about half the cruise period is divided into unattended hibernations. These periods will be as long as 550 days. It will spin at a rate of one rotation every 1.5 minutes. Rosetta's hibernation strategy differs from CONTOUR's for several reasons: Earth distance does not allow an omni-directional communications strategy. The hibernation recovery scheme must either rely on onboard autonomy systems or on a directional antenna strategy (like Giotto's recovery).

and then monitoring that configuration for anomalies. This occurs during the last eight days. The spacecraft is oriented with the spin axis properly positioned for hibernation; this reorientation will cause (in most cases) to RF link to use the lower bit rates – and hence the information frame rate will be much slower.

Tracking: Insure acceptable trajectory knowledge and extrapolate the path over the hibernation period such that position and velocity errors are within the DSN search and recovery capabilities.

Monitoring: Place the spacecraft in a spin stabilized attitude and confirm through telemetry (sun sensor and gyro data) that the attitude dynamics correlate with expected values. (mass properties modes and nutation/solar pressure simulations). Confirm that the spin axis is normal to the orbit plane. Confirm that the solar array power matches predicted values and that the change in solar array power over the hibernation solar distance is substantially greater than the peak anticipated loads (all thermostats on). Using onboard temperature sensors access any changes in temperature (due to changes in emissivity-absorbitivity surface properties) and confirm an acceptable temperature range over the hibernation solar distance.

Configuring: Many of the loads can be configured for hibernation days or weeks before hibernation begins (instruments, star tracker, heaters).

The actual transition from 'Active Spin' mode to 'Hibernation' mode will use a command macro. The script of the macro will power off the transmitter (TWT and Downlink Exciter card), set the mode relays to reflect hibernation mode, and then power off the data portions of the IEM. The rules in the autonomy system are set up to look at the state of the mode relays to determine if the hibernation rules are valid.

Once set, the hibernation rules will run until ground command (either by changing the state of the mode relays to 'active spin' or by commanding the spacecraft to run an onboard macro) transitions the spacecraft to 'Active Spin' mode.

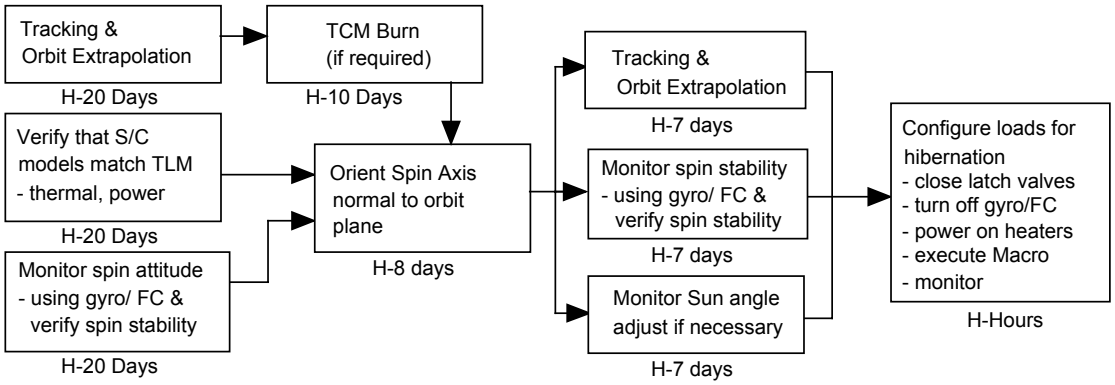

Figure 15. Preparing for hibernation flow chart.

Aiding Hibernation Recovery. Both C&DH processors will also run time-tag commands during hibernation. To aid in the hibernation recovery, a time-tag command will start the "Round Robin Antenna Switching" macro **two days after** the anticipated recovery period. The purpose of the macro is to cycle between different antenna and receiver combinations incase there was a failure of a command receiver during hibernation. There are three switch states as shown and each state is maintained for 10 hours before preceding to the next state. The full cycle takes thirty hours. This cycling is repeated indefinitely until ground control intervenes. Note: If the processors reset during the hibernation period then the time tag commands will be suspended and not execute.

Ground Recovery to "Active Spin Mode". Once configured into 'Active Spin' mode, the transmitter will be powered on and the spacecraft will enter a period of general health assessment and tracking. Ground con-

trollers will most likely adjust the spin axis to improve the RF antenna gain and communicate at higher data rates.

Acknowledgements

CONTOUR is a NASA Discovery Class mission sponsored by the NASA Management Office (NMO). The authors wish to thank Dave Jarrett of NMO.

References

Farquhar, R. W., "The Use of Earth-Return Trajectories For Missions to Comets", 4th John V. Breakwell Memorial Lecture, IAF-98-A.5.01, 49th International Astronautical Congress, Melbourne, Austrailia (September 28 – October 2, 1998).

Farquhar, R.W., Dunham, D.W., and Jen, S.-C., "CONTOUR Mission Overview and Trajectory Design", *Advances in the Astronautical Sciences: Spaceflight Mechanics 95*, 921-934 (1997).

Reynolds, E. L., Chiu, M.C., Farquhar, R. W., Dunham, D.W., "The CONTOUR Discovery Mission", IEEE Aerospace Conference, Paper f186b, Colorado, January 1999.

N. Calder, Giotto to the Comets, Presswork Press, 1992.

Morley, T. A., Giotto's Reactivation and Earth Swingby", ESA Bulletin 64, November 1990, Pages 50-58.