TU Sat 1—An Innovative Low-Cost Communications Satellite

Jacob H. Oehrig, Jeremy W. Schea, Adam C. Bennett, Noel Schutt, John R. Lee, W.C. Holmes, Dave C. Prentice, Andrew D. Platt, David L.Voss, Jonathan C. Voss, Jeffery F. Dailey, and H.D.Voss

Taylor University, 236 Reade, Upland, IN 46989
Hnvoss@tayloru.edu Phone: (765) 998-4843 Fax: (765) 998-4844
http://www.tayloru.edu/sat1

Abstract. Taylor University (TU), an undergraduate liberal arts university, is developing a communication Cube-Sat. TU Sat 1 incorporates powerful microelectronics, a gravity gradient boom, and a low-cost email communications system capable of operating at a 115-kbps rate near 0.9 GHz. The goal is to demonstrate low cost communication for remote villages in third world countries. TU Sat 1 also includes a magnetometer and Langmuir probe to measure plasma density and temperature at an altitude of 650 km. Furthermore, TU Sat 1 provides students with the needed experience and skills to be on the leading edge of innovation.

Introduction and Purpose

On May 1st of 2002, Taylor University will have its TU Sat 1 launched with many other cube-sats as part of the OSSS Cubesat program. TU Sat 1 differs from the other cube-sats in that its primary purpose is a state of the art email communications system. The satellite will be able to receive and transmit emails from remote ground stations at a rate of 115 kbps. This system could revolutionize the way that global communication is done. People can send and receive emails from anywhere in the world. Our purpose in this paper is to discuss TU Sat 1's design. We will thoroughly detail the orbit, mechanical design, power management, processing unit, and its communications systems. Although the main purpose of this satellite is to demonstrate and test this new technology, it also has several secondary goals:

- Meeting Critical Third World Need: Volunteers in Technical Assistance (VITA, http://www.vita.org/) have shown the need for communication to help economies in third world countries. Basic communication is essential to meeting the physical needs of a society.

- Demonstrating New Technology: This project pioneers novel wireless communication technologies for the space sector. Existing commercial space systems have data rates that are at least a factor of at least five slower and are orders of magnitude more expensive than we plan to demonstrate using low risk miniaturization. TU has for the past several years been a leader in space mixed mode microelectronics[2].

- Performing Research: TU recently built several plasma probes that were flown on the NASA DROPPS program. This technology is applied to the satellite. In addition, several CubeSat groups and NASA are interested in future collaboration

on CubeSats to enable new multi-point measurements reducing space-time ambiguity.

- Educating Undergraduates: Taylor University is incorporating the design and fabrication of a CubeSat into the curriculum. This project not only allows students to apply what they are learning, but it also challenges them to be creative, perform interdisciplinary work, function with other people in real-life scenarios, and solve real technical and social related problems.

Table 1—Physical Characteristics of TUSAT1

Physical Characteristics						
	Mass	1500 g				
	Construction	6061-T6 Aluminum frame, with pcboad shell				
	Dimensions	8.405" * 3.930" * 3.930"				
Mechanical	Hardware	Mass (g)	Current (mA)	Voltage (V)	Duty Cycle (% day)	Avg Power (mW)
	Plasma Probe + electronics	70	25	+/-6.5	0.2	32.5
	900 MHz Transceiver	78	650	6	0.125	487.5
	2m Transmitter, 70 cm Receiver	39	300	5	0.172	258
	TNC (Terminal Node Connection)	56	85	6.5	0.16	88.4
	386 Processor	56	440	5	0.06	132
	Power Board -	90				0
	Main board (2 microcontrollers)	80	45	5	1	225
	3 Axis Magnetometer	4	20	6.5	0.1	13
	Wiring	30	-	-	-	-
	Aluminum frame (w/ array backing)	270	-	-	-	-
	Solar Array backing (deployable)	100	-	-	-	-
	Deployables	45	-	-	-	-
	100 ft. Gravity Gradient Boom	110	-	5, 6	-	-
	Helmholtz Coil	20	-	-	-	-
	Batteries	180		7.4		
	Hardware	40	-	-	-	-
	Contingency	54	-	-	-	-
	Peak Current, Power consumption	-	1565		-	1236.4
	Solar Cells (excluding backing)	178	3276	8.16	0.07	1782.14
	Total Mass	1500	-	-	-	-
Communications						
	Antenna	2m/70cm (8.5 in, both sides)				
		900 MHz yagi (3in. & 2.9in.)				
	Data Rates	1.2 kbits - 2m/70cm				
		56 kbits to 115 kbits - 900 MHz				
Power						
	Batteries	4 Li-ion batteries - Panasonic CGP345010				
		4.2 V max per cell, 2 cell string (8.4 V max)				
		3.7 V nominal per cell, 2-cell packs (7.4 V)				
	Solar Panels	131.7 in^2, 8.16V, 3.5W output				
	Operating Temperature	-20 to 40 ^{o}C				
	Total Power Consumption	32.4 Watts				
Ground Station	Equipment					
	Icom IC-2800H 2m/70cm XCVR					
	FreeWave 900MHz XCVR					
	Kantronics KPC-3 TNC					
	3 Pentium 133 Computers					
	Yaesu G-5500 antenna rotor					
Launch Stresses						
	Axial Force	7.7g Static, 0.5g Dynamic				
	Lateral Force	0.8g Static, 0.3g Dynamic				
Scientific Measurements						
	Ionospheric Electron Density					
	Currents					
	Magnetic Fields					
Orbit						
	Inclination	Polar				
	Altitude	650 km				
	Period	97.7 min				
	Eccentricity	~0				
	Footprint	1800 km -- as measured from 30° to 30° above horizon				
	Contact time (Taylor)	600 seconds/pass - up to 5 passes per day usable				

Orbit

One Stop Satellite Solutions (OSSS) is launching TU Sat 1 along with several other CubeSats in May of 2002, into a sun-synchronous polar orbit. Depending on launch time, the satellite could be either in a partial-eclipse orbit or in a full illumination orbit. The latter option comprises the optimum scenario, but the system design allows our system to handle both orbits.

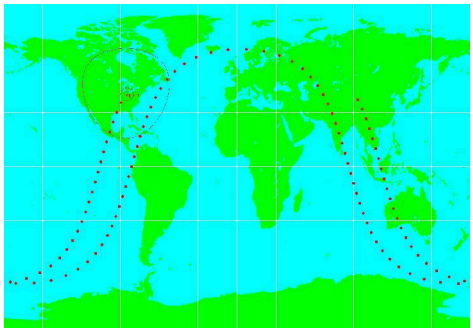

Fig. 1a-- The size and tracking of TU Sat 1's footprint

The altitude of the orbit will is 650 km (~404 miles) above the surface of the earth, with a period of 97.7 minutes (assuming an orbit eccentricity of 0). The low earth orbit (LEO) contributes to better signal transmission between the ground stations and the satellite; however the 7 km/s speed of the satellite creates some potential data rate problems. The communications aspect of the satellite demands that there is an adequate pass time, so designing an ample footprint size is essential. However, the largest possible footprint consists of the surface area of the earth visible to the satellite. In order to achieve this, the broadcast cone needs to be ~130 degrees. In order to correct for any potential oscillations in the satellite's orbit, TU Sat 1 uses a broadcast cone of 180 degrees. Assuming contact at zero degrees above the horizon, this gives us a total footprint diameter of 5450 km (Figs. 1a-1b), roughly the size of the United States. Most groundstations do not have the needed gain to transmit or receive below thirty degrees above the horizon. This reduces our usable footprint to a diameter of 1789 km.

Assuming a zero percent offset from the center of the footprint, and a 30 degree contact angle, the contact time will be 265 seconds. An eighty percent offset yields a usable pass time of one hundred sixty seconds (Fig. 1c). There may be instances of multiple user collisions with this size footprint; however these relatively long pass times will allow multiple users to connect during a single pass.

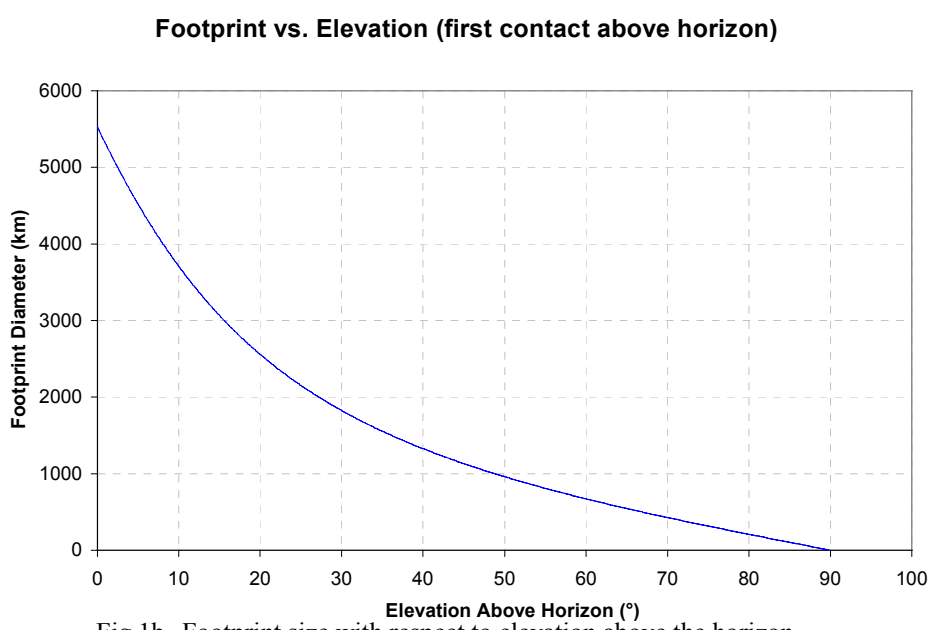

Fig 1b--Footprint size with respect to elevation above the horizon.

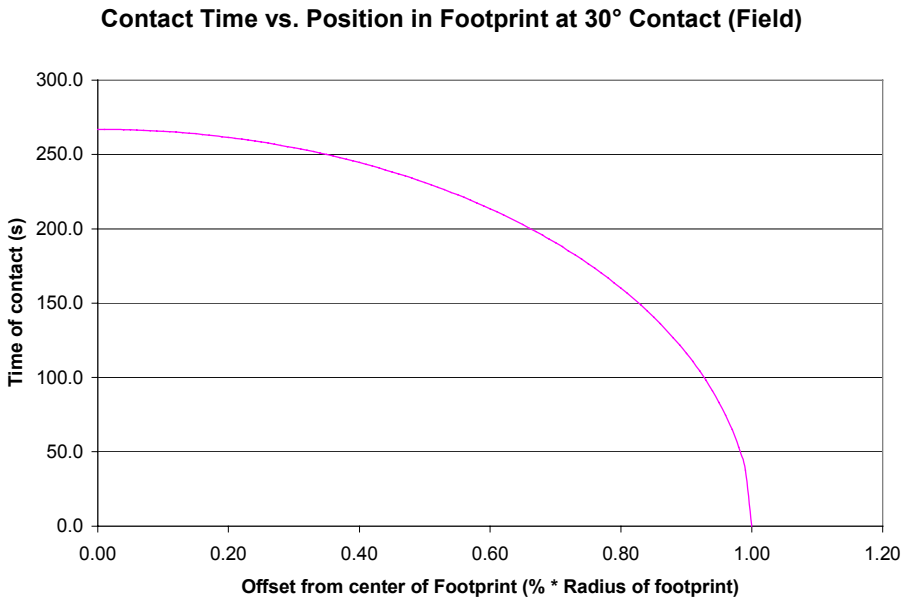

Fig. 1c -- Usable pass times based on percent offset from center of footprint.

Mechanical Components

Design Criteria

Thanks to the present technology boom, electrical components are faster, smaller, and more reliable than their recent predecessors. The design of our system takes advantage of these characteristics by incorporating the miniaturized technology available on the market into the design. Consequently TU Sat 1 is a state of the art communications system which is much smaller than any comparable system.

TU Sat 1 is restricted to 10 x 10 x 20 cm in order for it to fit into the launch tube provided by Space Systems Development Laboratory (SSDL). The whole system has a mass restriction of 1.5 kg in order to meet launch criteria. Designing an operational system within these constraints is difficult. Each new idea, no matter the value of the concept, is met by the question, "How big is it and how much does it weigh?"

Structural Design

As mentioned above, the limiting factors in the physical design of this satellite are size, weight, and power. Most of the electrical components are off-the-shelf and can not be reduced in size or weight. As a result, the frame is designed to serve several functions: structure, component mounts, solar array base, and thermal conductor. Building a frame that is strong and spacious enough to meet these requirements while still falling within the size and weight limitations is accomplished using custom milled aluminum walls.

The structural design uses interlocking side, top, and bottom panels milled from 6061-T6 aluminum (Fig. 2a). The panels are a maximum of 0.190" thick along the edges and fashioned with 0.060" thick ribs across

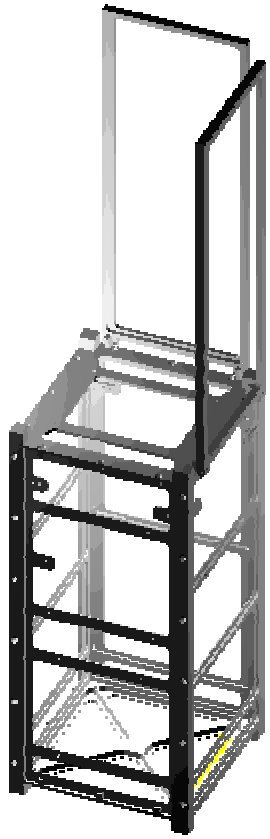

Fig. 2a – Panels assembled into a complete frame.

the middle to add structural stability (Fig. 2b). These ribs also serve as mounting brackets for flight hardware. Predrilled holes are positioned to attach the

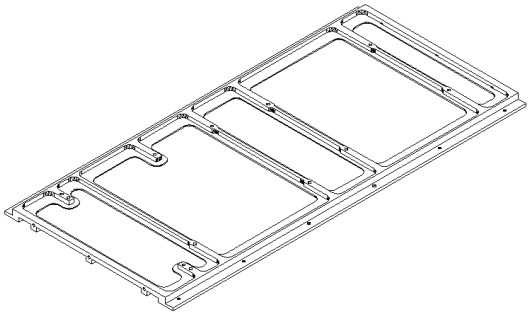

Fig. 2b – Detail of a side wall of the frame.

electronics boards and all hardware attaches directly to the frame. The panels are completely milled in the middle except for a 0.025" thick shelf that runs along all of the ribs at a distance of 0.100" from each edge. Epoxied to this shelf is a 0.012" thick copper clad pc board that acts as our solar cell backing and Faraday RF shield. This design gives us a lightweight frame with sufficient strength to pass the launch stress test of 7.7 G's in the axial direction and .8 G's in the lateral direction. At the same time, the dual purpose box reduces overall weight.

Another requirement of our structural design is deployment of needed components. There are seven deployables on the satellite that require fail-safe release methods. Although deployment devices are available for purchase, none fulfill our task without contributing significantly to the overall weight. Therefore, our systems must reliably deploy two solar panels, two 70cm antennas, one yagi antenna, one plasma probe, and a 100 ft. long tether (Fig. 3).

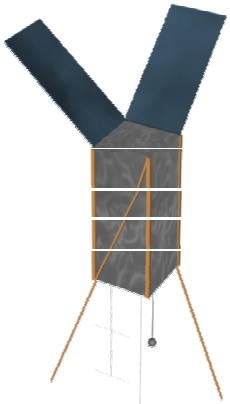

Fig. 3—A computer generated rendering of the satellite.

Solar Wing Design and Deployment

As with most picosatellite designs, the exterior of TU Sat 1 is covered with solar cells, providing at least 2 watts in full sunlight.[3] However, this does not meet the needs of our system. The answer to this problem is two wings that unfold to 85-degree angles and serve as extra solar panels. We placed solar cells on either side of the deployed panels to ensure adequate coverage (Fig. 4). This provides our system with up to 6 watts of operating power in full sunlight.

To avoid casting shadows onto the other arrays, we placed the two solar panels are placed at an 85-degree angle with respect to the top of the satellite. This allows for maximum solar exposure from the top and the sides depending on the position of the satellite (see Fig. 3 for image). Thus, no matter which way the satellite spins or where the sun is relative to the satellite, a sufficient number of solar cells is illuminated to maintain system power.

The solar cell deployment mechanism works much like a mousetrap. There is a small axle on the top of the satellite, around which the panels rotate. The panels are set into the frame just enough to keep them from hitting the sides of the launch tube during initial launch and deployment. A spring with a low spring constant is wound around the axle. This spring rotates the panel up after it is released. A stop at the top of the satellite keeps the panel at an 85 degree angle. At this angle the spring is still in tension, and keeps the panel locked in place. There will be some oscillations in the panel at deployment, but they will quickly be damped out from the friction in the spring assembly.

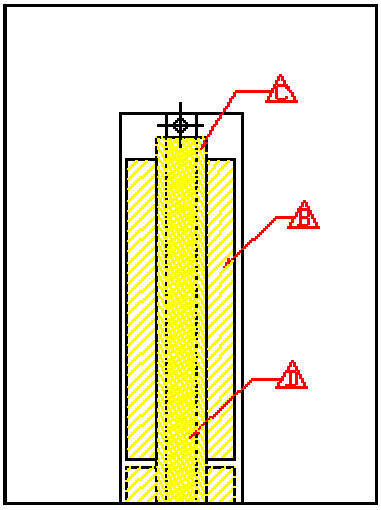

Fig. 4—A close-up of the deployed panel showing the solar cells (B) adhered with silicon adhesive (C) on both sides of the same pc board backing (D).

Antenna Deployment

TU Sat 1 has three separate antennas. In order to upload program instructions, the satellite uses a 2m Ham receiver. The satellite transmits some diagnostic data as well as a beacon signal through a 70cm Ham transmitter. The email, scientific data, and diagnostic data are transferred on the 900-930 MHz spread spectrum antenna.

The 70cm antenna serves as both a 70cm transmitting antenna and a 2m receiving antenna, allowing communication with the satellite during initial orbits. With this link, we are able to tell how the satellite is operating (via the beacon) and then initialize the start-up sequence for deployments when the satellite is over the primary ground station. Therefore, this antenna must deploy first. However, the design for this antenna must allow for some form of communication with the ground in the event of deployment failure. The design has two eight and a half inch long sections of conductive material that point out of the bottom of the satellite at 71 degree diagonals. The highest gain is perpendicular to the line of the antennas, which is also parallel to the line of the 900 MHz antenna. This is beneficial because along the line of the antennas is where the signal has to go through the most atmosphere thus needing the greatest possible gain. The angle also means that the broadcast signal is uninterrupted even if there is some oscillation in the satellite as it orbits. In order to deploy these antennas, each section folds up across the sides of the satellite not being used by the solar flaps. The hinge mechanism is very similar to that used by the solar flaps. It incorporates the use of a spring and a physical stop to open and lock the antenna. The antennas along the side will still be able to broadcast prior to deployment. They will be broadcasting out to the sides of the satellite, but a weak signal will still be able to reach earth. Thus, through the beacon transmitted over this antenna, we will be able to analyze and correct any deployment failures.

The spread spectrum antenna is a two-element 33 cm yagi. Once deployed, it looks like an inverted "T" with two top crosses instead of one. The antenna is made out of a strong wire that has high tensile strength. The whole antenna "folds up" into a round tube inside the satellite. Once the burn wire releases the antenna it is pushed out by a spring. The crosspieces merely unfold to their natural position.

Gravity Gradient Boom

There are two main forms of satellite stabilization: active and passive. Active stabilization includes such things as thrusters and dynamic electronic control whereas passive stabilization involves such things as gravity gradients and viscous dampers. We chose to use the passive stabilization of a gravity gradient boom because it is cheaper, less complex than burning fuels for thrust or writing AI code, and weighs much less than other methods. The boom utilizes the fundamental law of gravity to achieve its stabilized state. The tether assembly on TU Sat 1 spools out 100 feet of line with an attached mass on the end. When deployed correctly, the mass will be 100 feet closer to the earth than the satellite and thus be feeling a stronger gravitational force and shorter orbital period. The result is that the tip mass, in essence, orients the bottom of the satellite down towards the earth causing the satellite to remain upright and in a stable attitude. Also, the tip mass will be at a lower altitude than the satellite and will therefore have a faster orbit. This will pull the satellite along and force it to always point towards the earth.

The deployment of the tether is similar to the antique clothes dryers that wrung out water by compressing the clothes between two rollers. Instead of clothes, we are pulling a thin titanium wire (about seven thousandths of an inch in diameter) off a spool and through two wheels which act as rollers. One of the wheels is attached to a stepping motor. The potential problem with this design is that the boom may be deployed the satellite in the wrong orientation. If this happens, instead of being stable with the bottom facing the earth, TU Sat 1 will be oriented upside-down. Therefore, the tether must be retractable. To do this, a small DC motor is attached to the spool. If deployed incorrectly, the motor winds up the tether and then deploys it again properly. The

stepping motor attached to the roller creates enough tension to allow the spool to be wound compactly and properly.

Weight Distribution

In order to reduce any wobble and to increase the stability as the satellite spins, the center of mass needs to be as close to the actual center of the satellite as possible. Therefore, we need to distribute the weight evenly throughout the interior of the satellite. This is not an easy task because there are several components that must be placed in specific locations regardless of their weight (i.e. the gravity gradient boom). All the electrical components are mounted along the sides of the frame (each of the side panels holds approximately the same mass). The plasma probe, antennas, and tether system are required to be on the bottom of the satellite. Therefore, in order to counteract this, the heavy batteries are placed at the top (zenith). This gives a well-balanced satellite that has its center of mass (and thus its center of rotation) very close to its center.

Thermal

There are also many components on the satellite that will be producing heat as they operate. There is very little atmosphere at the 650 km altitude, so convection effects will not keep TU Sat 1 cool. The metal frame is used as a heat sink. As components heat up, the heat dissipates throughout the frame itself. The heat radiates off the frame and into the colder space using Optical Solar Reflective (OSR) tape. There will be a little bit of heat conduction through the frame, which will allow the heat to transfer to the cooler side of the satellite and radiate into space. However, by spinning the satellite this is accomplished much more effectively and thus thermal stability is maintained. Spinning also reduces the amount of direct sunlight incident on each panel by 1/6.

To reduce the heating effects of incident sunlight, OSR is positioned on the outside of the satellite to reflect most of the thermal energy from the sun, while emitting in the infra-red. However, the solar cells absorb a large flux of solar energy as heat. The cells are about 19% efficient and reflect only about 8% of the incident electromagnetic radiation. The remaining 73% of the incoming energy is trapped as heat. Some of this is conducted away from the cells and emitted as infra-red, and the remaining heat is emitted by the cover glass of the cells which, like the OSR, has a high emmisivity.

Power Management

The single greatest cause of satellite failure is a malfunction in the power system. A number of satellites have been lost when the solar array failed while observers on the ground watched helplessly as the batteries drained. It is therefore quite imperative to have a robust power management system that is capable of supplying all the power needs yet has the simplicity to function with a low failure rate.

Solar Array

The main component of the satellite's power is the solar array. Even with fully charged batteries, the satellite will only be able to operate a maximum of 2 hours without an operational array.
Several criteria were used to judge the selection of a solar cell brand:

- Physical dimensions of individual cells (constrained by specific array dimensions)
- Efficiency (desire maximum efficiency and GaAs/Ge type)
- Voltage Output (desire voltage output appropriate for battery charging)
- Ease of Implementation (desire coverglass, metal interconnects, i.e. CIC form)
- Cost

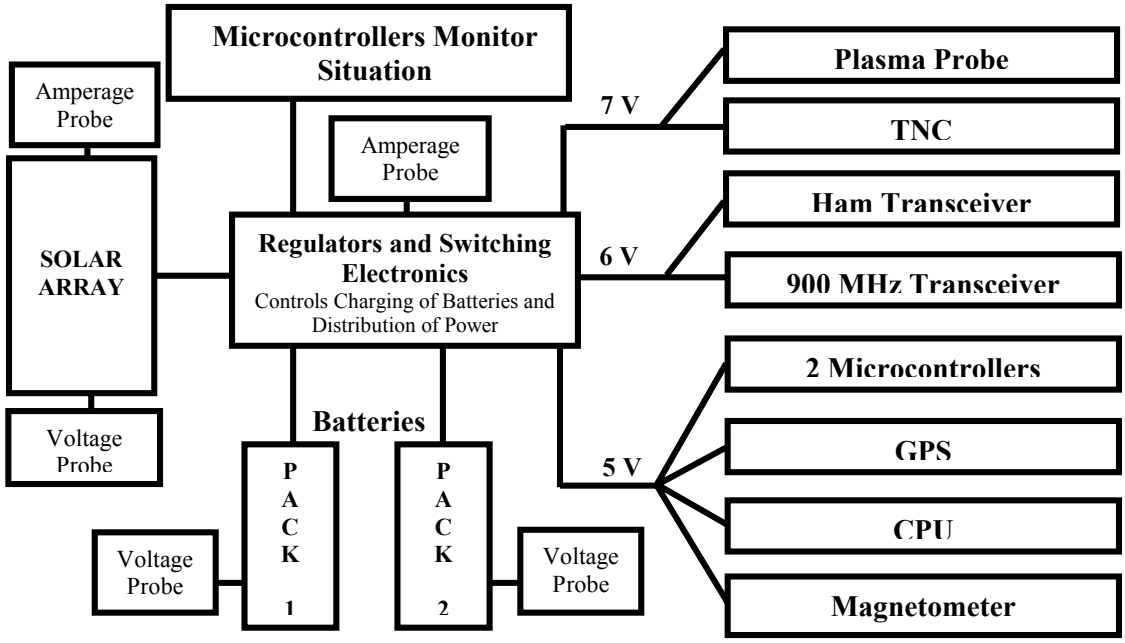

Fig. 6—Block diagram of the power management system.

The solar cells chosen are made by Spectrolab (Fig. 5). The 1.23" x 2.72"cells to be flown on TU Sat 1 have an average efficiency of 19% and will produce a current of 0.273 Amps per cell. The array is comprised of 48 cells arranged in eight strings of six cells each. This configuration yields a total voltage of 12.24 V and a power output of 3.34 W. Fifty-two watt hours is the maximum power produced per orbit if the satellite is under eclipse orbit or 136 watt hours maximum per orbit if the satellite is in constant illumination. This means there is sufficient power to charge the batteries and run all the electrical components on the satellite. The GaAs/Ge type cells in question come in Cell Interconnect Cover (CIC) form; the cells themselves already have metal interconnects to attach to each other and protective coverglass to slow the degradation process. The cells are attached to each other using SN62 solder (62% tin, 36% lead, 2% silver) to solder cell connections and wiring and a two part GE silicon RTV566 to adhere the cells to the backing. Additionally, each cell has a bypass diode built in to allow strings with dead cells to continue operation at a lower output voltage.

The backing we are using for the solar cells is a 0.012" thick copper clad PC board. This board is not only lightweight, but serve as a Faraday cage to block electromagnetic noise. In addition, the boards provide the diagonal stability for the frame.

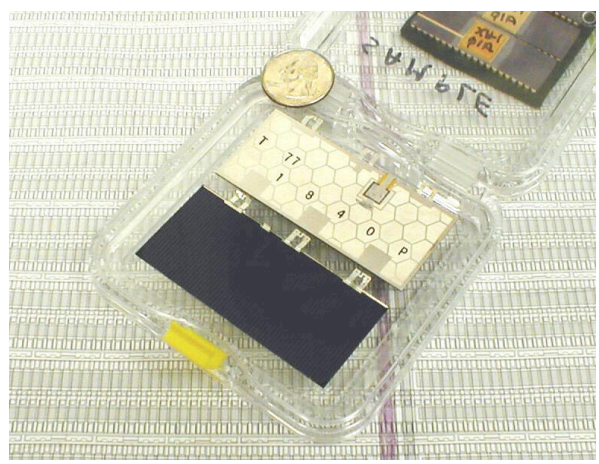

Fig. 5—A sample of two of the GaAs/Ge solar cells. The front (darker) and back of the cells are shown.

Batteries

TU Sat 1's batteries during eclipse and supplement solar current during power intense 900 MHz transmissions. If the orbit has 50% eclipse per orbit, then the batteries will be used for half of the operation time. The same batteries provide initial start up and signal beaconing until the solar panels are deployed. The criteria used to judge the selection of a battery cell brand were as follows:

- Dimensions of Individual Cells (constrained by specific volume)
- Longevity (desire maximum cycle life)
- Voltage Output (desire voltage output appropriate for battery charging)
- Capacity
- Mass
- Testing for space applications

Given these design constraints, the Lithium Ion battery is the best suited (Panasonic CGP345010). Each of these 1.34" x 1.96" x 0.41" cells hold 3.7 V and can deliver up to 1400 milliamp hours. The design uses two battery packs of two cells each. Each battery pack has the two cells in series, which increases the total voltage up to 7.4 V and keeps the current the same. This provides sufficient power to operate all the electrical components at the simultaneously for slightly more than one hour. Having two battery packs allows for a multifunctional power supply which gives a wide range of power capabilities. For instance, the battery packs can be used together in parallel if a burst of current is needed, one battery pack can be in use while the other is being charged, or cycled independently in the event one should begin to fail. This battery pack arrangement meets any electrical need that could arise on the satellite including most emergencies. Moreover, the StenSat program has performed extensive testing of the Lithium Ion battery and demonstrated its abilities for space use. They claim to have tested the batteries for 4000 cycles, although the cycle was fairly long: approximately 5 hours constant current charging, followed by 2 hours of constant discharging, with a 20 minute break between cycles. This is comforting for similar cycling would occur during the operation of our satellite. The charge/discharge period becomes more balanced with respect to time and more variable with respect to current if the satellite is in an eclipsed orbit. However, on average it will be about 50 minutes of charging and 45 minutes discharging.

Protection Circuitry

Charge and discharge protection circuits are required in addition to the protective circuits inherent to the battery. The pack has an upper charging limit of 8.2 V and 900 milliamp hours. If the pack voltage rises above this, power must immediately be cut-off. If the battery voltage drops below ~7.2 V, the satellite begins a shutdown sequence. Shortly after this point, battery output begins to drop quickly. If the pack drops to six volts, all power usage must be terminated because the battery nearly drained, which may potentially damage it.

Power Distribution

To lengthen the life of the batteries and enhance the function of the satellite, the power distribution electronics have maximum flexibility (Fig. 6). This flexibility will help prevent critical failure of the mission if any problems arise. For example, power produced from the solar array passes into a digital multiplexing switch. From there, it can be diverted to charge either of the two battery packs or power the satellite directly. Furthermore, power from either or both of the battery packs can be used to supplement power to the satellite electronics during high current draws. If either battery pack exhibits erratic behavior, that pack can be isolated from the rest of the system without compromising the mission. Furthermore, the satellite can operate solely upon the solar arrays, although functions would be limited to daylight use only.

High efficiency regulators adjust the system voltage of eight volts to the various needs of the spacecraft: seven volts for the plasma probe and TNC, six volts for both of the transceivers, and five volts for all other digital electronics. The microcontrollers receive data from a series of amperage and voltage probes. They are programmed to automatically adjust the power distribution during emergencies and limit power usage if the batteries are insufficiently charged.

Central Processing Unit (CPU) and Microcontrollers

The microcontrollers and internal processing units on our satellite are responsible for all control and command of the satellite. Due to the limited amount of actual contact time with the satellite, all communications, diagnostics, power management, and data collection have to be fully automated and dependable.

System Hardware

Considering the very strict space and size limitations, the processing unit must be versatile, yet small. To this end, we took advantage of the recent improvements in circuit miniaturization. For the email server a miniature 386 processor with 256 Mbytes of flash memory and a DOS 3.0 operating system is used. The board (measuring only 2" x 4") was purchased from Jkmicro.

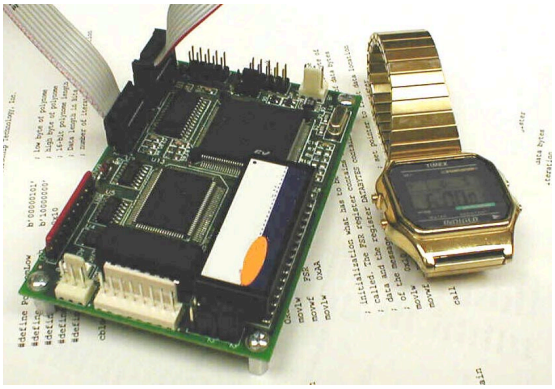

Fig. 7—386 computer on a board.

The 386 computer (Fig. 7) uses 3.17 Watt hours per day in order to operate. So, to limit power consumption two 16C774 Motorola microchips are programmed to handle the majority of satellite control and maintenance. The first microchip, Brain, handles data collection, component deployment, internal communication, and memory storage. The second microchip, Pinky, handles all diagnostics, power management functions and Ham radio communication. This microchip will be able to disconnect different satellite subsystems from the main power source based on power availability and need.

On Board Communication System

Our on board communication system consists of two parts. The first and most heavily used is an Inter-Integrated Chip, or IIC, bus. This bus functions much the same way as the main bus on a personal computer and allows data transmission between the different microcontrollers, the real time clock, the secondary switching microchip, and the four memory chips. It can be controlled by either Brain or Pinky and can pass data to or from any of the other devices on the bus to those two chips.

The second major form of onboard communication is a serial link between the 386 and Brain. This link will be used to pass data that we need to store for later transmission to the base groundstation. Because the 386 can access 256 MBytes of data and the off chip memory can only store 256 KBytes this link will allow the storage of significantly more information than using the off chip memory only.

Control Communication System

The microchips will have Ham communication with groundstations at a rate of 120 bytes per second. This interface, which is directed through Pinky, will be used to transmit control and command codes as well as to download diagnostic data from the satellite. All major functions, including deployment, data collection rate, and power control, will be ground modifiable at any time when the satellite is over the main groundstation. This system will also be used to transmit a beacon during the early stages of the satellite's mission in order to facilitate location of the satellite before it's path is completely mapped.

Email Communication System

As mentioned above, the 386 processor will handle the e-mail server. When the satellite passes over a ground station a series of events occurs. First, Pinky detects the initiation signal from the 900 MHz spread, sent from the ground station. This signal will be transmitted at 115 kbps, or roughly 11 kbytes, per second. Once the processor is running, it sends a signal down to the ground station asking for the user ID and password. If a valid ID and password are received, the 386 sends a signal telling the ground station that they are connected. The server then takes all the e-mails for that user from memory and sends them over the spread along with header information describing the size and type of message. It then waits for an acknowledgement signal from the ground indicating the full file was received. If the packet size received matches the size sent, it is assumed the email was error free. This is a safe assumption due to the 32-bit CRC check performed by the spread radios. If the two sizes do not match, then the server continues to resend the entire packet until they do.

After downloading has completed successfully, the satellite server begins uploading e-mails from the ground. The same bit testing and correction methods are used as in the downloading, and files are resent if corrupt. The 386 then takes the messages and stores them in the correct destination folder for the given user space. Once the satellite passes over the main ground station, at Taylor University, all pending e-mails are downloaded and sent over the Internet. Also, all external e-mails from the Internet are uploaded and stored in the correct folders. A visual representation of this can be seen in Fig. 8 below.

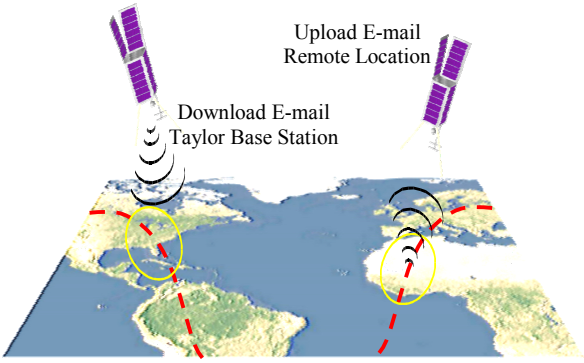

Fig. 8—Simplified picture showing how the TUSAT1 email system will work.

Power System

Due to power restrictions, the 386 e-mail server as well as other subsystems on Taylor's satellite (including the radios and various scientific instruments) will need to be powered down. Pinky will control all of this as well as handle battery cycling. It will also control power allotment with a secondary microchip that it will control through the use of the onboard IIC bus. This secondary microchip will have 15-17 digital pins, which it will use to switch several NEC DIP solid state relays controlling the power flow throughout the satellite. Pinky will make all power priority decisions using data it will collect relating the current and voltage needed by all systems as well as that available in the system. It will collect this data through the use of amperage and voltage probes placed on the same line as the batteries and solar cells (see Fig. 6). All power control decisions are fully automated, but are also modifiable from the ground during those periods when the satellite is over Taylor.

Data Collection System

The main purpose of Brain is to collect scientific data from the onboard plasma probe for later evaluation at Taylor. This device will report plasma density and temperature, which will be stored temporarily on off chip memory through the IIC bus. Once the 256 KBytes of off chip memory storage fills, the data will be passed through Brain to the 386, which will store the data until it is transmitted to earth.

The other major type of scientific data to be collected is from the magnetometer. This device will gives information on the direction and intensity of the magnetic fields in the x, y and z axis. This data is stored in off chip memory for transmission to earth and used to calculate rotation relative the earth.

Real Time Clock

Another major system the microchips control is the real time clock. This device allows the tracking of the actual time of day by tracking the months, days, hours, minutes and seconds. This information will be stored along with all scientific and diagnostic data in order to mark when the data was taken.

Satellite Communications

The Communications system is divided into two parts, the amateur radio system and the spread spectrum system. The amateur radio system is used to download diagnostic data, upload control signals and transmit a beacon signal. The spread spectrum system is used for the email system and for downloading diagnostic and scientific data. In keeping with the philosophy for the design of the satellite, off-the-shelf products are the heart of the system.

Spread Spectrum Radio

The spread spectrum radio (Fig. 9) is an inexpensive commercial system from FreeWave. The 900-930 MHz system was chosen because of international frequency allocations. These frequencies are within the Ham radio frequencies and are protected by international treaty. This means that governments can not legally bar their use which simplifies the process of receiving permission for the portable stations. The spread spectrum radio interfaces to a standard RS-232 port making it easy to interface with the email server.

Amateur Radio

For the amateur radio system, a V-U (mode J) system is used. Using a 70cm antenna for downlink will make it easy for amateur radio operators to monitor the TU Sat 1 beacon. For the radio we have chosen a Yaesu VX-1 dual band. This radio is ideal due to its small size and low power requirements.

The Terminal Node Controller (TNC) is from PacComm PicoPacket. The PicoPacket includes a packet mailbox, but due to power requirements, this feature is not being used.

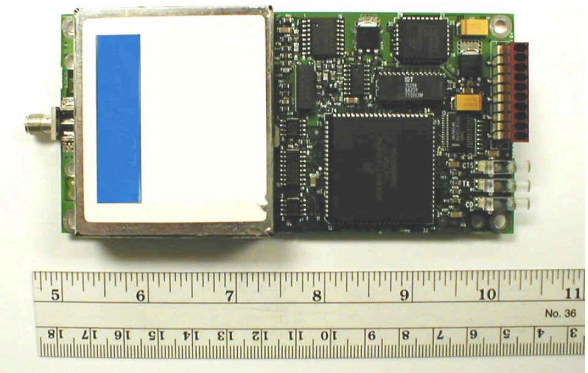

Fig. 9—900 MHz FreeWave XCVR

Unlike other TNC's considered, the PicoPacket uses a digital carrier to detect the signal instead of relying on the radio's squelch. This simplifies the design by not requiring an external carrier detect circuit. To further reduce the noise on the TNC signal, a CTCSS, or Continuous Tone-Coded Squelch System, will be used on the signal transmitted to the satellite. In order to conserve power the TNC is turned off when not in use. Brain will monitor a pin on the radio. When it receives a signal, Pinky will turn on the TNC. After the connection is closed, the PIC will turn the TNC off.

Beaconing

The satellite will transmit a beacon every few minutes if it has enough power. The beacon will identify the satellite and include basic diagnostic information. Pinky will automatically power up the TNC and send an unconnected protocol beacon containing the proper information.

Antennas

As mentioned above, there are three antennas on the satellite: two amateur radio antennas and one spread spectrum antenna.

The spread spectrum provides the gain needed for the system. TU Sat 1 will fly relatively close to the ground so the gain must be high enough to get through the atmosphere but low enough to have a usable pass time. The antenna effectively meets this trade off between pass time and signal strength.

For the amateur radio antennas, two quarter wavelength 70cm groundplanes are used. These antennas are angled for a broad signal transmitted mostly below the satellite. Since the stations receiving this signal are permanent, large antennas are used on the ground. TU Sat 1's 70cm antennas also function as receiving antennas for the 2m amateur system.

Parent Ground Station

Standard amateur radio equipment is used for the main ground station. The ground station automatically track the satellite passes using data given by the North American Aerospace Defense Command (NORAD). During each pass, the computers in the ground station will automatically connect to the satellite to download diagnostic and scientific data as well as email.

Antennas

Because of the size, weight, and power restrictions on the satellite, the ground station is designed to compensate for any communications problems. Because of this, a high-gain antenna system is used at the ground station. To account for the Faraday rotation of radio signals, both right and left circularly polarized antennas are used.

Helical antennas were chosen for mechanical considerations. The best length for the 2m antenna is ten feet. To simplify the design, and for better stability and gain, all antennas are ten feet long.

The antenna system consists of two sets of antennas mounted on either side of a rotor. Each set consists of a 2m, a 70cm, and a 33cm antenna. The 33cm antennas are made from ten-foot lengths of four-inch schedule 20 PVC. The 70cm antennas are each made from a ten-foot section of eight-inch schedule 40 PVC. The outside diameter of this pipe is the exact size needed for the frame of a 70cm helical antenna. The weight of two ten-foot sections of schedule 40 PVC is much higher than the rotor can handle. To reduce this weight, we cut large sections out of the pipe. This removed the majority of the weight without significantly reducing its strength. The 2m antennas are built around the 70cm and 33cm antennas. Rods extending from the common axis support the heavy wire of the 2m helix. To reduce any possibility of interference between the antennas we wound the 2m and 33cm antennas opposite of the 70cm antenna.

Portable Stations

One of the goals of TU Sat 1 is to test the miniaturization of satellite communications systems by using standard components. This goal requires small portable ground stations capable of communicating with the satellite. These portable stations must be small, inexpensive, durable, and have low power requirements. They must also be easy for less technically skilled people in the field to use. The system should be a "black box" that the user aligns and connects to their computer. The only hard part of the setup is making sure that the antennas are aligned well enough to track the satellite.

The portable stations will be fully functional even when not connected to the user's computer. To do this, the system is based around a small 386 board identical to the one used in the satellite. This board will take care of all the tracking and data handling for the user. When the satellite is not overhead, the system will run in a low power mode. Shortly before the satellite comes over the horizon, the computer will power-up the spread spectrum radio. To maintain compatibility, the same spread spectrum radios in the ground stations are in the satellite. The radio is programmed to attempt to connect with the satellite upon startup. Once a connection is established the ground station will automatically download all email addressed to it, upload all of its outgoing email, download any software updates required, and download the latest NORAD tracking elements.

The user's computer will connect to the ground station using an Ethernet link. This simplifies the portable stations by eliminating the need to deal with multiple types of connections.

Satellite Tracking

Because of the simplicity required in the portable stations, a complex tracking system like the one used in the ground-station is unusable. Instead, we employ a system of several small directional antennas. These antennas will have much lower gain than the helicals used at the ground station. The design of the antenna system will allow the alignment to be done by simply using a compass to point an arrow on the antenna box north.

Using an omni-directional antenna on the ground station is not an option, because of the low power output allowed to unlicensed operators on the spread spectrum radios. The best solution to the complexity problem is a system of several small directional antennas. To remove the need for a rotor, we used an electronic switch between the antennas.

The computer in the portable station must know its approximate location. This is used along with tracking information downloaded from the satellite to control the spread spectrum radio and the antenna switch. During each pass of the satellite, the latest tracking information will be downloaded to the groundstation. The tracking system will automatically turn the radio on shortly before it is needed. This will provide a safety factor in case the portable station is unable to connect during several passes. This extra time will also allow the ground station to work if its exact position is not known. As the satellite passes overhead, the tracking program on the 386 switches the antenna.

Scientific Experiments

Plasma Probe

The Langmuir plasma probe will measure plasma density and temperature. The data collected will assist in the study of high altitude effects, including auroral regions, equatorial fountains, moving currents, and other high altitude phenomena. The measurements will be taken by a half-inch solid aluminum sphere that will be suspended beneath the satellite. There will be a voltage applied to the probe, which can be ramped between –7 and +7 V to measure the plasma temperature. The spherical design of the probe allows good measurement even if the satellite is rotating. As long as the probe is suspended beneath the satellite, there will be adequate surfaces for data collection. The data collection rate for the plasma probe will be variable, depending on storage space and downlink time. The average data rate will be around 400-500 Hz with possible burst rates of up to 100kHz. This allows more precise, higher resolution study of certain areas of interest. Data collected is stored with 8-bit precision and can fill up to 1.25 gigabytes per day of memory onboard the satellite. Depending on power considerations, the plasma probe may be used 20-100% of the time while in orbit.

Future plans include development of a constellation of these probes in order to make multi-point measurements in similar areas simultaneously. This could result in invaluable data that is impossible to gather with one probe alone.

Magnetometer

The onboard magnetometer will measure the magnetic field and output its three axis components. This data will be collected whenever it is desired, perhaps at a frequency of 1 Hz. The magnetic field measurements will serve several purposes. First, it will give limited positioning and attitude reference for the satellite. This may aid in attitude control and give some indication of where the satellite is located in comparison to the earth's magnetic field. In addition, data will be collected to compare the changes in magnetic field as the satellite passes through regions of interest to the plasma probe so that possible connections between plasma density and magnetic field variance will be studied. This instrument has a variety of benefits and is very small, lightweight, and low power.

Conclusion

In May of 2002, Taylor University will be launching Indiana's first satellite completely designed and built by undergraduates. This satellite will provide low-cost communication that is on the cutting edge of technology. The 115 kbps data rate will be faster than most existing commercially available communication satellites. It will also provide an unprecedented look at the plasma activity in our upper atmosphere. At the same time, by utilizing the technology of miniaturized electronic circuitry and design, we are able to build this communication platform for considerably less cost than a standard satellite.

Acknowledgments

The authors of this paper would like to thank the following for their time and technical involvement in the design and construction of TU Sat 1:
Josh Bryson, Brent Gerig, Chris Fennig, Jonathan Rodriguez, Clint Herron, Joe Wilhelmi, Joel Weisenburger, Daniel Gall, Eric Grashorn, Geoff Chase, Adam Becker, and John Nussbaum.

We would also like to thank the many faculty, staff, and students who put their time and effort into this project.

References

1. K. Dohbrty, G. Dutchover, I. Galysh, H. Heidt, J. McGuire, D. J. Nagel, D. Niemi, "Li-Ion Rechargeable Cell Thermal-Vacuum Test Results." www.Stensat.org/Docs/liion_test.html, 2001.

2. http://www.css.tayloru.edu/~physics/minielec/

3. 14th Annual/USU Conference on Small Satellites.

Biographical Information

Jacob Oehrig is a senior at Taylor University, majoring in Engineering Physics. He has been previously involved in the design and fabrication of Taylor's solar car as well as the fabrication of an experimental aircraft. He is currently involved in the Taylor University physics research program.

Jeremy Schea is a senior Computer Engineering major at Taylor University. He has participated as a Teaching Assistant for three years at Taylor University in the Physics and Computer Science departments. He was a National Merit Scholar and was on the Taylor University Dean's list between 1999 and 2000. He is currently involved in the Taylor University physics research program.

Adam Bennett recently graduated from Taylor University with a BS in Physics Systems. His research endeavors have included high altitude atmospheric physics conducted at NASA's Goddard Space Flight Center, chaos theory as exhibited through chaotic electronic circuits, and project management of a solar racing team.

Noel Schutt is a junior Computer Engineering major at Taylor University. He became an amateur radio operator in 8th grade because of his interest in packet radio and amateur satellites. He currently holds an Extra class amateur radio license. He is an active member of the Allen County Amateur Radio Technical Society. Noel hopes to go into space research and eventually become an astronaut.

John Lee is a junior at Taylor University, double majoring in physics and philosophy. He has participated in data analysis for the NASA based DROPPS program. John is currently working in the area of B physics as well as numerical simulations of alpha decay.

Will Holmes received his BS in Physics and Mathematics from Southern Nazarene in 1994. He later earned his doctorate in Materials Science from Washington State University with research in

Coarsening in Multiphase Multicomponent Systems. He is currently an Assistant Professor in the Physics Department at Taylor University.

Dave Prentice has a BS degree in Physics from Taylor University. During the past five years, he has worked as Research Engineer in the Taylor University Physics Department on NASA funded projects such as IMAGE and DROPPS. His primary skills include CMOS/ASIC microchip design, electrical design, and CAD drafting.

Andy Platt has a BA degree in Physics from Taylor University and currently works in the Physics Department as Data Engineer. His past projects have included the Solar Racing Team, theoretical particle physics, and DROPPS.

David Voss is a senior at Taylor University and is majoring in Engineering Physics. David has conducted research at Taylor University during the summers of 1999 and 2000. David participated in the design and construction of Taylor's first solar car as a mechanical engineer.

Jonathan Voss is a sophomore Computer Engineering major at Taylor University. His work with TU Sat 1 involved mechanical drawings design. Other research in the Taylor University Physics Department involves DROPPS data analysis, and the development of Taylor's solar car.

Jeffery Dailey was trained in engineering at ITT Tech., Ball State University, and Jordan Alternative Energy College. His primary field of skill is telecommunications and electronic design engineering. He currently works at D&L/Amerizon Wireless as Senior Design Engineer.

Henry Voss received his B.S. in Electrical Engineering from Illinois Institute of Technology in 1972, his M.S. degree in Electrical Engineering at the University of Illinois in 1974, and his Ph.D. in Space Physics and Electrical Engineering at University of Illinois in 1977. For fifteen years he worked at the Palo Alto Research Laboratory for the Lockheed Missile and Space Company. There he conducted research in ionosphere, magnetospheric and auroral physics, studied space plasma and developed advanced flight instrumentation. For the past seven years he has acted as the Physics department chair at Taylor University in Indiana.